No. PE-H15KAD

TCM®

PARTS MANUAL

GASOLINE ENGINE

H15KA
H20KA
H25KA

NISSAN

TCM CORPORATION

B－1　ご使用のまえに（1／2）

このパーツマニアルは，TCM フォークリフトのエンジンの構成部品を収録しています。

部品ご注文について

部品ご注文の際は，必ず車両の形式・製造番号（号車），エンジンの形式・製造番号（号機），部品番号および注文数を明示してください。車両の製造番号（号車）は車両銘板に，エンジンの製造番号（号機）は，シリンダブロックに打刻で表示しています。

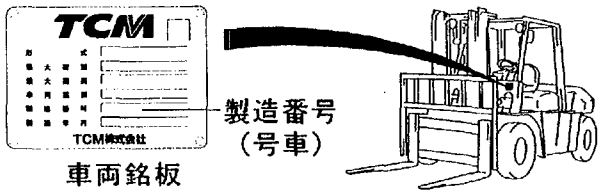

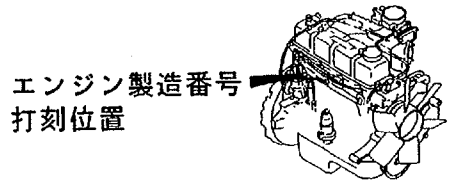

ご使用について

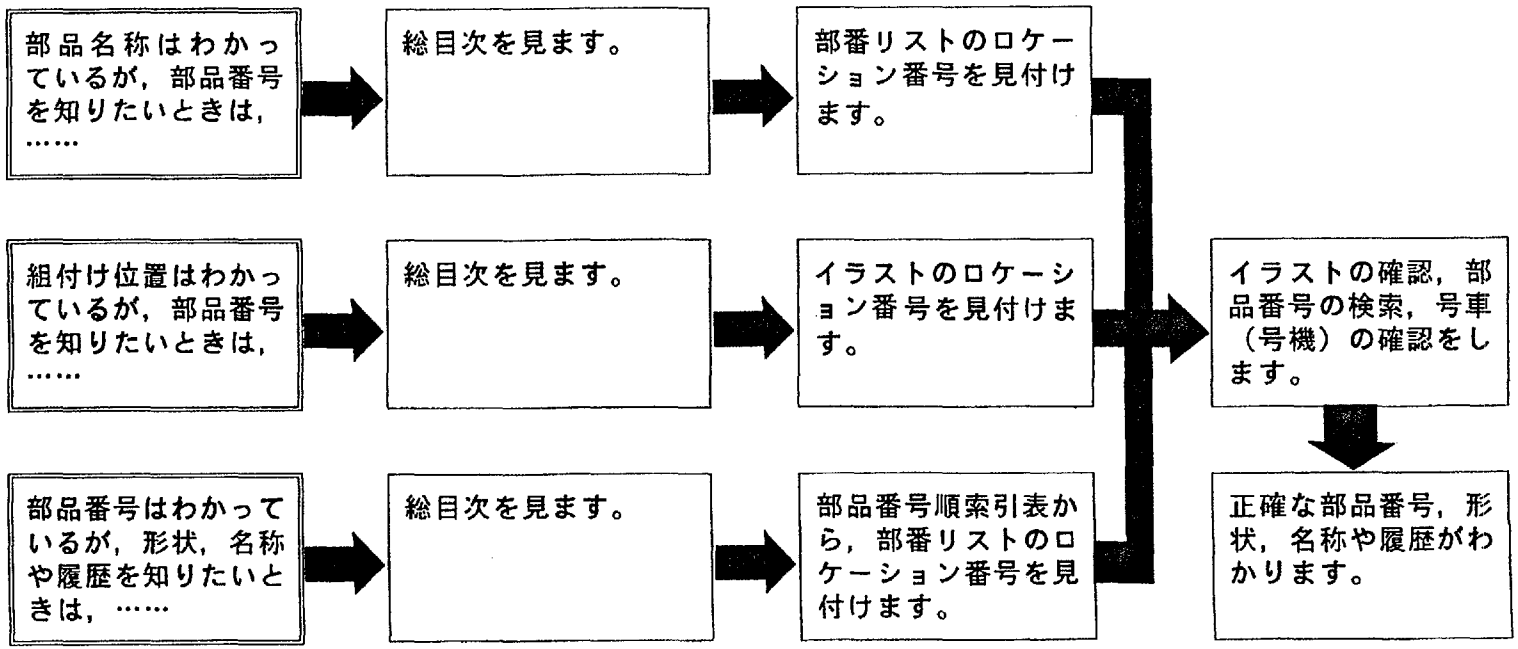

B－2　ご使用のまえに（2／2）

略語および記号

ＡＳＳＹ	組立品を示します。
Ｏ．Ｓ．	オーバサイズ仕様部品を示します。
Ｕ．Ｓ．	アンダサイズ仕様部品を示します。
ＬＯＣ．	ロケーション番号を示します。
ＳＴＤ	標準装備品を示します。
＊	セットおよびキットの販売部品を示します。
ＡＲ	必要に応じた数を使用します。
Ｌ	長さを示します。

部品は，品質向上のため予告なく変更することがありますので，あらかじめご了承ください。

B-3 INTRODUCTION (1/2)

This Parts Manual contains the component parts of the engine mounted on **TCM FORKLIFT TRUCK**.

How to order parts

When ordering, be sure to specify the model name and serial number (machine number), engine type and serial number (engine number) of your machine, as well as the part number and desired quantity for each part. The machine serial number (machine number) is indicated on the machine name plate, and the engine serial number (engine number) is punched on the cylinder block.

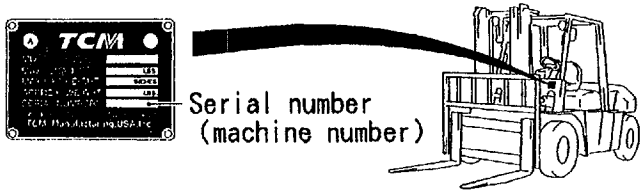

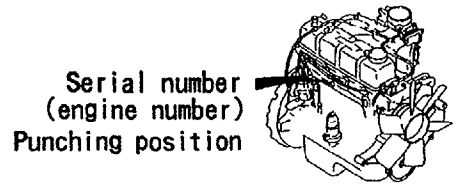

How to use the Parts Manual

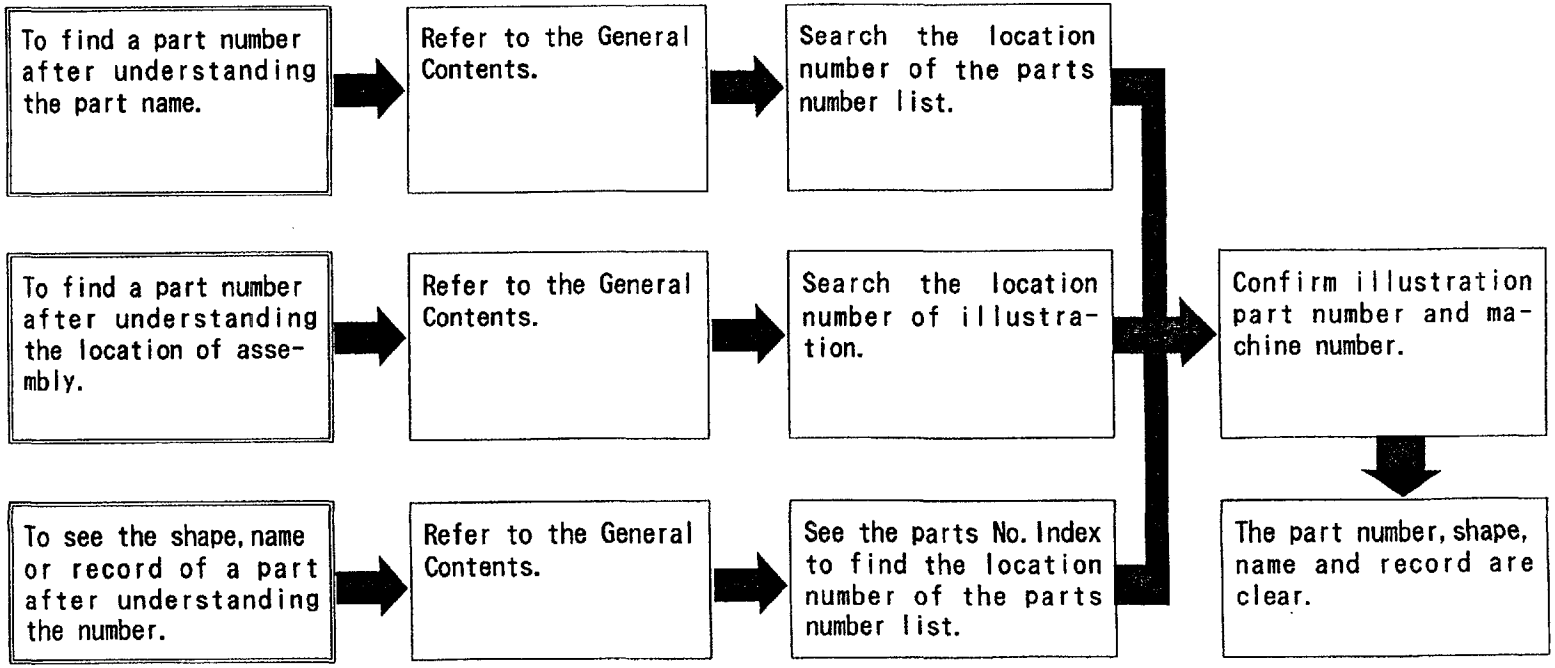

Abbreviations and symbols

ASSY ···· Assembled unit.

O.S. ···· Oversize.

U.S. ···· Undersize.

LOC. ···· Location number.

STD ····· Standard.

* ····· The marketable part set or kit.

AR ····· Quantity required.

L ····· Length.

Materials and specifications subject to change without notice.

B— 5 APPLICABLE MODEL

TYPE	ENGINE TYPE	APPLICABLE MODEL		
A	H15KA4GR00	FG9N3		
		FG10N18	FG20N16	FG20N15
		FG14N18	FG20N16	FG25N15
		FG15N18		
		FG18N18		
B	H15KA4GR03	FG10N18(EXA)	FG10N18(EXA(GS))	
		FG15N18(EXA)	FG15N18(EXA(GS))	
		FG18N18(EXA)	FG18N18(EXA(GS))	
C	H20KA4GR00	FHG15N8	FG20N5	FG20N4
		FHG18N8	FG23N5	FG23N4
			FG25N5	FG25N4
			FG28N5	FG28N9
			FG30N5	FG30N9
D	H20KA4GR01	FHG15N8(OC)	FG20N5(OC)	FG20N4(OC)
		FHG18N8(OC)	FG23N5(OC)	FG23N4(OC)
			FG25N5(OC)	FG25N4(OC)
			FG28N5(OC)	FG28N9(OC)
			FG30N5(OC)	FG30N9(OC)
E	H20KA4GR02	FHG15N8(EXN)	FG20N5(EXN)	FG20N4(EXN)
		FHG18N8(EXN)	FG23N5(EXN)	FG23N4(EXN)
			FG25N5(EXN)	FG25N4(EXN)
			FG28N5(EXN)	FG28N9(EXN)
			FG30N5(EXN)	FG30N9(EXN)
F	H20KA4GR03	FHG15N8(EXA)	FG20N5(EXA)	FG20N4(EXA)
		FHG18N8(EXA)	FG23N5(EXA)	FG23N4(EXA)
			FG25N5(EXA)	FG25N4(EXA)
			FG28N5(EXA)	FG28N9(EXA)
			FG30N5(EXA)	FG30N9(EXA)
		FHG15N8(EXA(GS))	FG20N5(EXA(GS))	FG20N4(EXA(GS))
		FHG18N8(EXA(GS))	FG23N5(EXA(GS))	FG23N4(EXA(GS))
			FG25N5(EXA(GS))	FG25N4(EXA(GS))
			FG28N5(EXA(GS))	FG28N4(EXA(GS))
			FG30N5(EXA(GS))	FG30N9(EXA(GS))
		FHG15N8(EXK)	FG20N5(EXK)	FG20N4(EXK)
		FHG18N8(EXK)	FG23N5(EXK)	FG23N4(EXK)
			FG25N5(EXK)	FG25N4(EXK)
			FG28N5(EXK)	FG28N9(EXK)
			FG30N5(EXK)	FG30N9(EXK)

TYPE	ENGINE TYPE	APPLICABLE MODEL	
G	H20KA4GR04	FG20N4(LPO)	FHG20N2(LPO)
		FG23N4(LPO)	FHG25N2(LPO)
		FG25N4(LPO)	FHG30N2(LPO)
		FG28N9(LPO)	
		FG30N9(LPO)	
H	H20KA4GR05	FG20N4(EXA/LPO)	FHG20N2(EXA/LPO)
		FG23N4(EXA/LPO)	FHG25N2(EXA/LPO)
		FG25N4(EXA/LPO)	FHG30N2(EXA/LPO)
		FG28N9(EXA/LPO)	
		FG30N9(EXA/LPO)	
J	H20KA4GR06	SG10N6	
		SG12N6	
K	H25KA4GR00	FHG20N5	FHG20N2
		FHG25N5	FHG25N2
		FHG30N5	FHG30N2
L	H25KA4GR01	FHG20N5(OC)	FHG20N2(OC)
		FHG25N5(OC)	FHG25N2(OC)
		FHG30N5(OC)	FHG30N2(OC)
M	H25KA4GR02	FHG20N5(EXN)	FHG20N2(EXN)
		FHG25N5(EXN)	FHG25N2(EXN)
		FHG30N5(EXN)	FHG30N2(EXN)
N	H25KA4GR03	FHG20N5(EXA)	FHG20N2(EXA)
		FHG25N5(EXA)	FHG25N2(EXA)
		FHG30N5(EXA)	FHG30N2(EXA)
		FHG20N5(EXA(GS))	FHG20N2(EXA(GS))
		FHG25N5(EXA(GS))	FHG25N2(EXA(GS))
		FHG30N5(EXA(GS))	FHG30N2(EXA(GS))
P	H25KA4GR60	FHG35N9	
		FHG36N9	
Q	H25KA4GR61	FHG35N9(EXA)	FCG35N6(EXA)
		FHG36N9(EXA)	FCG36N6(EXA)
		FHG36N2(EXA)	FCG36N7(EXA)

GENERAL CONTENTS 総目次

SECTION	LOC.No.
ご使用のまえに(1/2)	B-1
ご使用のまえに(2/2)	B-2
INTRODUCTION(1/2)	B-3
INTRODUCTION(2/2)	B-4
APPLICABLE MODEL	B-5
ENGINE BODY	
CYLINDER BLOCK & OIL PAN	C-2
CYLINDER BLOCK & OIL PAN	C-4
FLYWHEEL HOUSING & TIMING GEAR COVER	C-6
FLYWHEEL HOUSING & TIMING GEAR COVER	C-7
PISTON, CRANKSHAFT & FLYWHEEL	C-8
PISTON, CRANKSHAFT & FLYWHEEL	C-10
ENGINE BODY VENTILATION	C-12
ENGINE BODY VENTILATION	C-13
HEAD & VALVE MECHANISM	
CYLINDER HEAD & ROCKER COVER	D-2
CYLINDER HEAD & ROCKER COVER	D-3
CAMSHAFT & VALVE MECHANISM	D-4
CAMSHAFT & VALVE MECHANISM	D-5
INLET & EXHAUST	
EXHAUST MANIFOLD & INTAKE MANIFOLD	E-2
EXHAUST MANIFOLD & INTAKE MANIFOLD	E-3
LUBRICATION	
LUBRICATING SYSTEM	F-2
LUBRICATING SYSTEM	F-3
COOLING	
WATER PUMP & THERMOSTAT	G-2
WATER PUMP & THERMOSTAT	G-4

SECTION	LOC.No.
FUEL	
CARBURETOR (FITTING PARTS)	H-2
CARBURETOR (FITTING PARTS)	H-3
CARBURETOR (INNER PARTS)	H-4
CARBURETOR (INNER PARTS)	H-6
FUEL PUMP & COVER	H-8
FUEL PUMP & COVER	H-9
FUEL PUMP(INNER PARTS)	H-10
FUEL PUMP(INNER PARTS)	H-11
GOVERNOR	H-12
GOVERNOR	H-13
ELECTRICAL	
IGNITION SYSTEM	I-2
IGNITION SYSTEM	I-3
DISTRIBUTOR(INNER PARTS)	I-4
DISTRIBUTOR(INNER PARTS)	I-5
ALTERNATOR (FITTING PARTS)	I-6
ALTERNATOR (FITTING PARTS)	I-7
ALTERNATOR (INNER PARTS)	I-8
ALTERNATOR (INNER PARTS)	I-9
STARTER (FITTING PARTS)	I-10
STARTER (FITTING PARTS)	I-11
STARTER (INNER PARTS)	I-12
STARTER (INNER PARTS)	I-13
STARTER (INNER PARTS)	I-14
PARTS NUMBER INDEX	M-2

C-2 CYLINDER BLOCK & OIL PAN

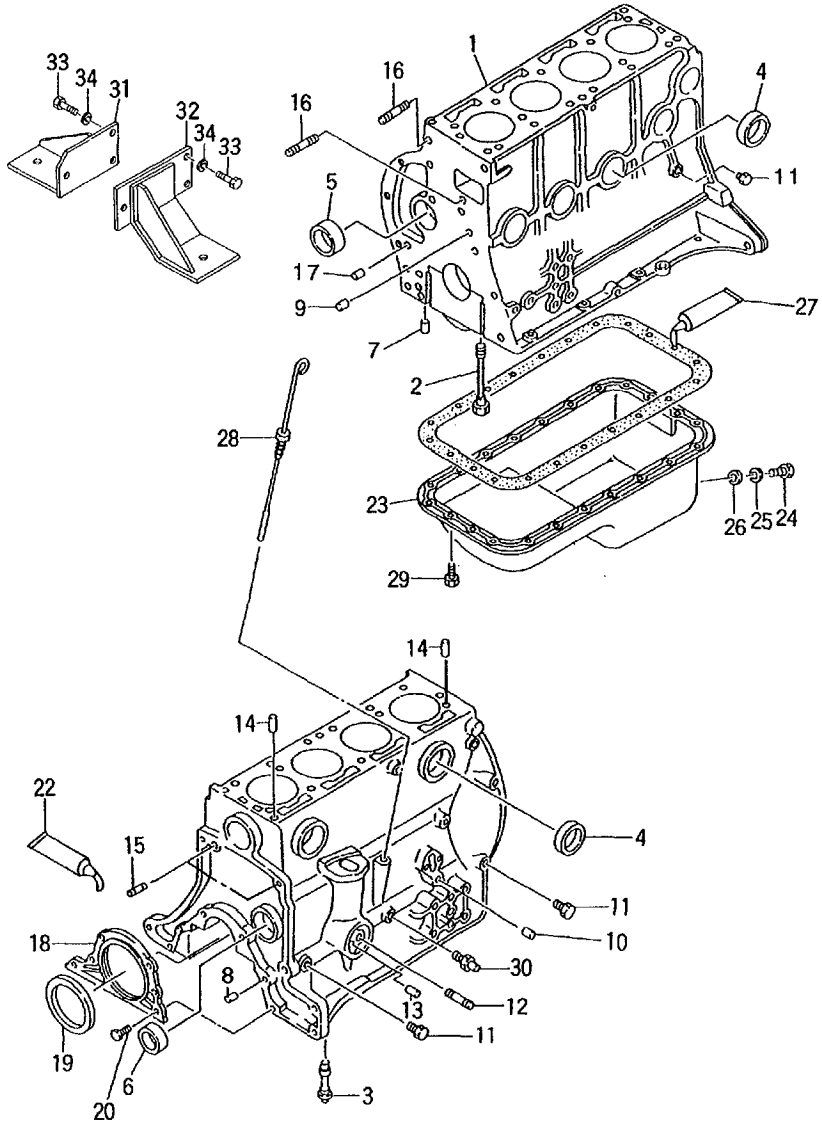

A :H15KA4GR00 D :H20KA4GR01 G :H20KA4GR04 K :H25KA4GR00 N :H25KA4GR03
B :H15KA4GR03 E :H20KA4GR02 H :H20KA4GR05 L :H25KA4GR01 P :H25KA4GR60
C :H20KA4GR00 F :H20KA4GR03 J :H20KA4GR06 M :H25KA4GR02 Q :H25KA4GR61

No.	Part No.	Description	Req'd	Remarks • Serial No.
1	N-11000-55K00	BLOCK,CYL	1	A,B
				INC.2-13
-	N-11000-50K00	BLOCK,CYL	1	C,D,E,F,G,H,J
				INC.2-13
2	N-12293-P0500	BOLT	10	A,B,C,D,E,F,G,H,J
3	N-15075-50K01	BUSHING	1	A,B,C,D,E,F,G,H,J
4	N-00933-1351A	PLUG	7	A,B,C,D,E,F,G,H,J
5	N-13002-71200	KIT,BUSHING	1	A,B,C,D,E,F,G,H,J
				STD
6	N-11019-32201	PLUG	1	A,B,C,D,E,F,G,H,J
7	N-11024-K0100	PLUG	2	A,B,C,D,E,F,G,H,J
8	N-11024-78200	PLUG	1	A,B,C,D,E,F,G,H,J
9	N-11046-73402	DOWEL	3	A,B,C,D,E,F,G,H,J
10	N-11023-78200	PLUG	1	A,B,C,D,E,F,G,H,J
11	N-08931-3021A	PLUG	3	A,B,C,D,E,F,G,H,J
12	N-15213-21002	STUD	1	A,B,C,D,E,F,G,H,J
13	N-15241-16A01	VALVE	1	A,B,C,D,E,F,G,H,J
14	N-11053-73400	DOWEL	2	A,B,C,D,E,F,G,H,J
15	N-30412-P5100	DOWEL	2	A,B,C,D,E,F,G,H,J
16	N-11392-50K00	STUD	2	A,B,C,D,E,F,G,H,J
17	N-11024-85G01	PLUG	1	A,B,C,D,E,F,G,H,J
18	N-12297-50K00	RETAINER	1	A,B,C,D,E,F,G,H,J
K1	N-10101-50K25	KIT,GASKET	1	A,B,C,D,E,F,G,H,J
				ENGINE REPAIR
				INC.19,22,27 & etc.
K2	N-11042-50K25	KIT,GASKET	1	A,B,C,D,E,F,G,H,J
				VALVE REGRIN
				INC.19 & etc.
19	N-12279-50K00	* SEAL	1	A,B,C,D,E,F,G,H,J
20	N-08120-8201E	BOLT	4	A,B,C,D,E,F,G,H,J
22	N-KP710-00150	* GASKET,LIQUID	AR	A,B,C,D,E,F,G,H,J
23	N-11110-50K00	PAN,OIL	1	A,B,C,D,E,F,G,H,J
				INC.24-26
				-1998.12
-	N-11110-50K01	PAN,OIL	1	A,B,C,D,E,F,G,H,J
				INC.24-26
				1999.1-
24	N-11128-69200	PLUG	1	A,B,C,D,E,F,G,H,J
25	N-11026-61000	WASHER	1	A,B,C,D,E,F,G,H,J
26	N-11119-61000	SEAT	1	A,B,C,D,E,F,G,H,J

C-3 CYLINDER BLOCK & OIL PAN

A :H15KA4GR00 D :H20KA4GR01 G :H20KA4GR04 K :H25KA4GR00 N :H25KA4GR03
B :H15KA4GR03 E :H20KA4GR02 H :H20KA4GR05 L :H25KA4GR01 P :H25KA4GR60
C :H20KA4GR00 F :H20KA4GR03 J :H20KA4GR06 M :H25KA4GR02 Q :H25KA4GR61

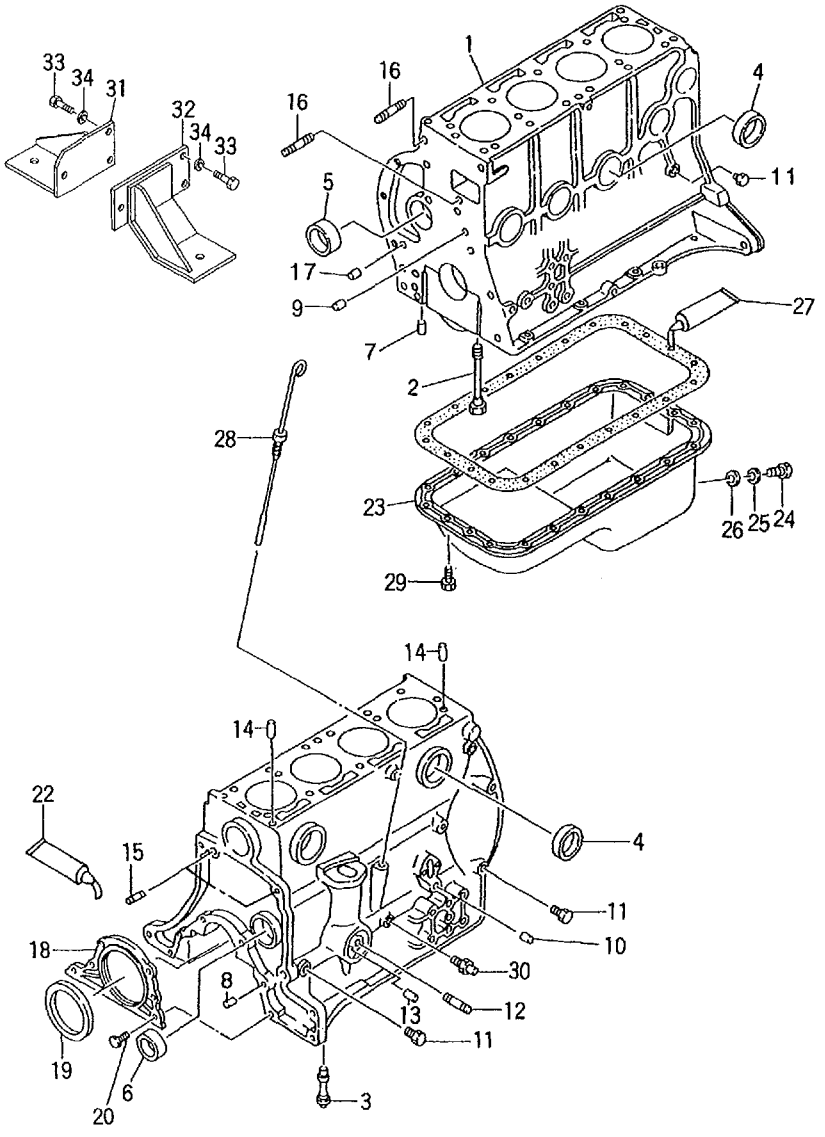

No.	Part No.	Description	Req'd	Remarks · Serial No.
27	N-KP710-00150	* GASKET,LIQUID	AR	A,B,C,D,E,F,G,H,J
28	N-11140-50K00	GAUGE,OIL LEVEL	1	A,B,C,D,E,F,G,H,J
29	N-08120-61228	BOLT	12	A,B,C,D,E,F,G,H,J
30	N-25240-89911	SWITCH,OIL PRESSURE	1	A,B,C,D,E,F,G,H,J
31	N-11213-K7216	BRACKET	1	A,B,C,D,E,F,G,H,J
32	N-11214-K7216	BRACKET	1	A,B,C,D,E,F,G,H,J
33	N-08171-0281A	BOLT	6	A,B,C,D,E,F,G,H,J
34	N-08915-2401A	WASHER	6	A,B,C,D,E,F,G,H,J

C-4 CYLINDER BLOCK & OIL PAN

A :H15KA4GR00 D :H20KA4GR01 G :H20KA4GR04 K :H25KA4GR00 N :H25KA4GR03
B :H15KA4GR03 E :H20KA4GR02 H :H20KA4GR05 L :H25KA4GR01 P :H25KA4GR60
C :H20KA4GR00 F :H20KA4GR03 J :H20KA4GR06 M :H25KA4GR02 Q :H25KA4GR61

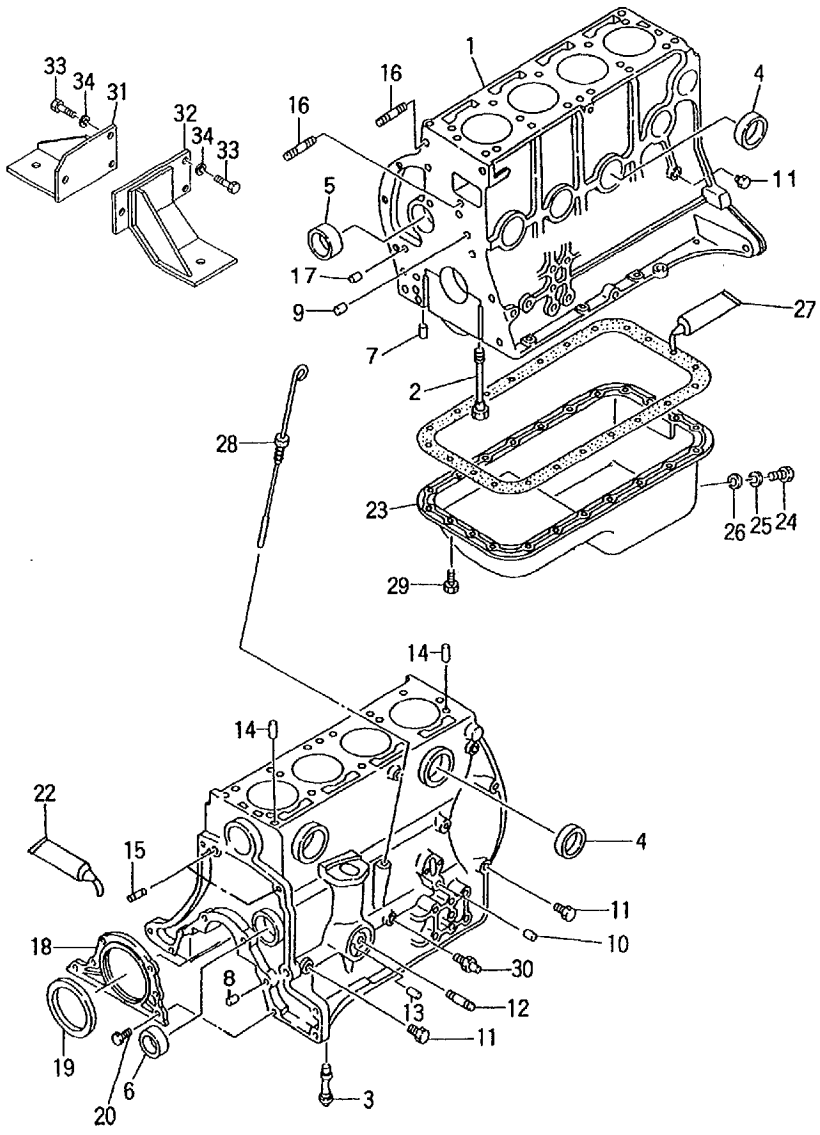

No.	Part No.	Description	Req'd	Remarks • Serial No.
1	N-11000-60K00	BLOCK,CYL	1	K,L,M,N,P,Q
				INC.2-13
2	N-12293-P0500	BOLT	10	K,L,M,N,P,Q
3	N-15075-50K01	BUSHING	1	K,L,M,N,P,Q
4	N-00933-1351A	PLUG	7	K,L,M,N,P,Q
5	N-13002-71200	KIT,BUSHING	1	K,L,M,N,P,Q
				STD
6	N-11019-32201	PLUG	1	K,L,M,N,P,Q
7	N-11024-K0100	PLUG	2	K,L,M,N,P,Q
8	N-11024-78200	PLUG	1	K,L,M,N,P,Q
9	N-11046-73402	DOWEL	3	K,L,M,N,P,Q
10	N-11023-78200	PLUG	1	K,L,M,N,P,Q
11	N-08931-3021A	PLUG	3	K,L,M,N,P,Q
12	N-15213-21002	STUD	1	K,L,M,N,P,Q
13	N-15241-16A01	VALVE	1	K,L,M,N,P,Q
14	N-11053-73400	DOWEL	2	K,L,M,N,P,Q
15	N-30412-P5100	DOWEL	2	K,L,M,N,P,Q
16	N-11392-50K00	STUD	2	K,L,M,N,P,Q
17	N-11024-85G01	PLUG	1	K,L,M,N,P,Q
18	N-12297-50K00	RETAINER	1	K,L,M,N,P,Q
K1	N-10101-50K25	KIT,GASKET	1	K,L,M,N,P,Q
				ENGINE REPAIR
				INC.19,22,27 & etc.
K2	N-11042-50K25	KIT,GASKET	1	K,L,M,N,P,Q
				VALVE REGRIND
				INC.19 & etc.
19	N-12279-50K00	* SEAL	1	K,L,M,N,P,Q
20	N-08120-8201E	BOLT	4	K,L,M,N,P,Q
22	N-KP710-00150	* GASKET,LIQUID	AR	K,L,M,N,P,Q
23	N-11110-50K00	PAN,OIL	1	K,L,M,N,P,Q
				INC.24-26
				-1998.12
-	N-11110-50K01	PAN,OIL	1	K,L,M,N,P,Q
				INC.24-26
				1999.1-
24	N-11128-69200	PLUG	1	K,L,M,N,P,Q
25	N-11026-61000	WASHER	1	K,L,M,N,P,Q
26	N-11119-61000	SEAT	1	K,L,M,N,P,Q
27	N-KP710-00150	* GASKET,LIQUID	AR	K,L,M,N,P,Q
28	N-11140-50K00	GAUGE,OIL LEVEL	1	K,L,M,N,P,Q

C-5 CYLINDER BLOCK & OIL PAN

A :H15KA4GR00 D :H20KA4GR01 G :H20KA4GR04 K :H25KA4GR00 N :H25KA4GR03
B :H15KA4GR03 E :H20KA4GR02 H :H20KA4GR05 L :H25KA4GR01 P :H25KA4GR60
C :H20KA4GR00 F :H20KA4GR03 J :H20KA4GR06 M :H25KA4GR02 Q :H25KA4GR61

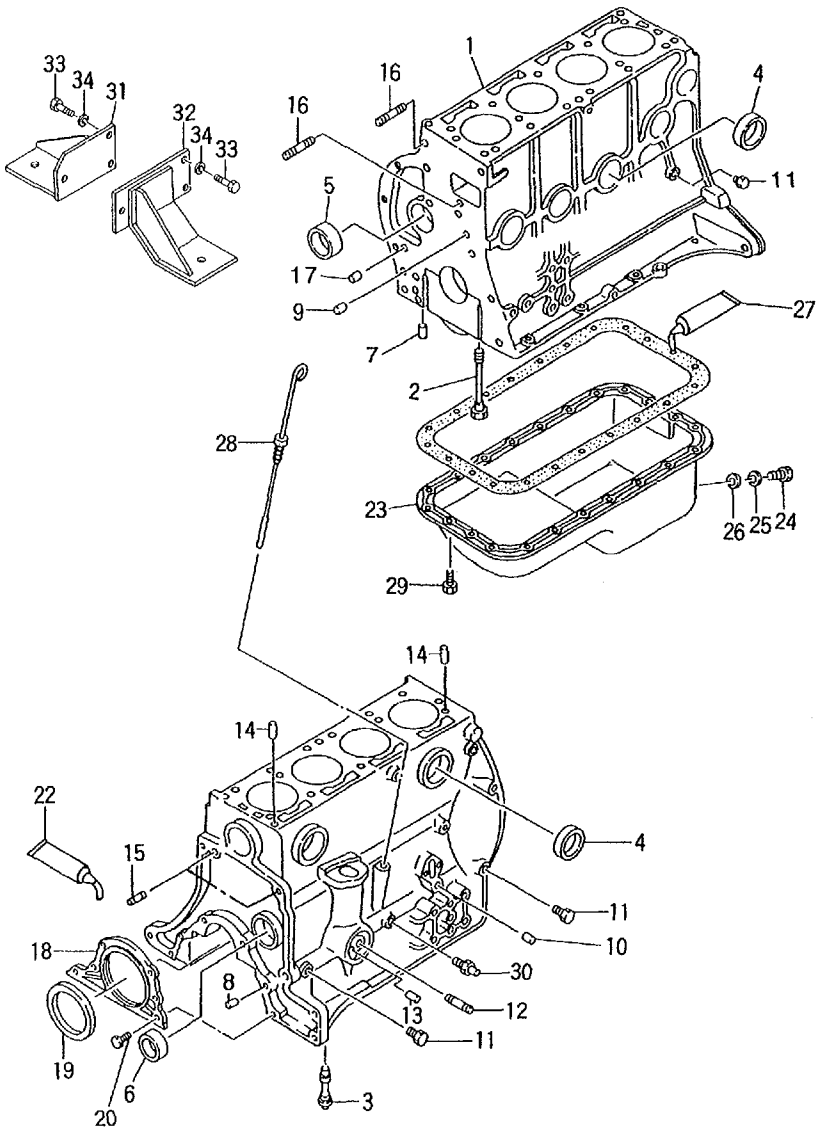

No.	Part No.	Description	Req'd	Remarks · Serial No.
29	N-08120-61228	BOLT	12	K,L,M,N,P,Q
30	N-25240-89911	SWITCH,OIL PRESSURE	1	K,L,M,N,P,Q
31	N-11213-K7216	BRACKET	1	K,L,M,N,P,Q
32	N-11214-K7216	BRACKET	1	K,L,M,N,P,Q
33	N-08171-0281A	BOLT	6	K,L,M,N,P,Q
34	N-08915-2401A	WASHER	6	K,L,M,N,P,Q

C-6 FLYWHEEL HOUSING & TIMING GEAR COVER

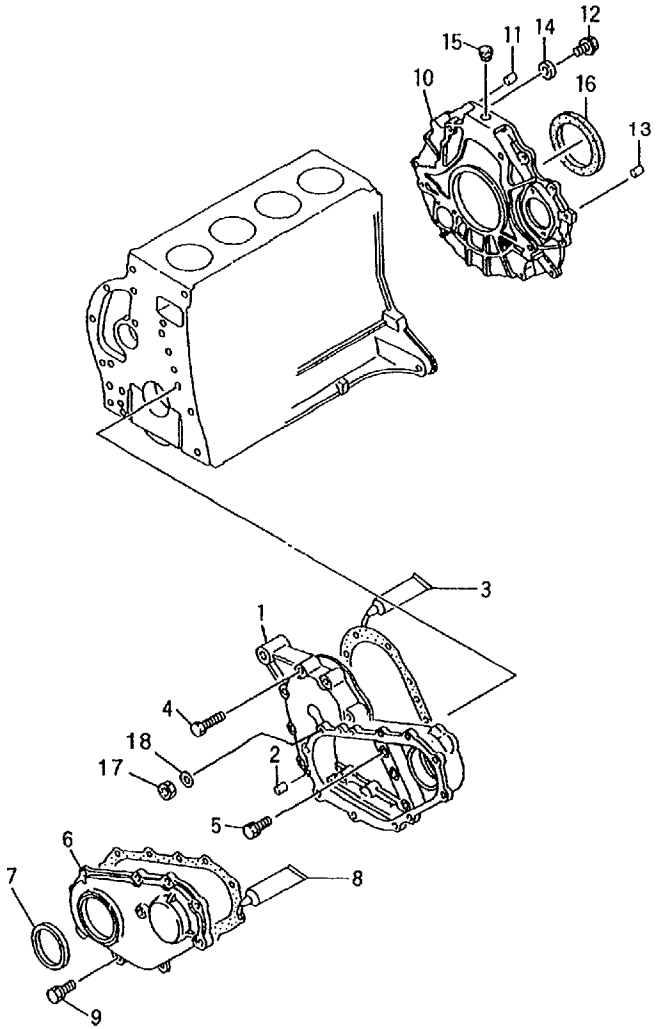

A :H15KA4GR00 D :H20KA4GR01 G :H20KA4GR04 K :H25KA4GR00 N :H25KA4GR03
B :H15KA4GR03 E :H20KA4GR02 H :H20KA4GR05 L :H25KA4GR01 P :H25KA4GR60
C :H20KA4GR00 F :H20KA4GR03 J :H20KA4GR06 M :H25KA4GR02 Q :H25KA4GR61

No.	Part No.	Description	Req'd	Remarks · Serial No.
1	N-13034-50K00	CASE	1	A,B,C,D,E,F,G,H,J
2	N-11046-73402	DOWEL	1	A,B,C,D,E,F,G,H,J
K	N-10101-50K25	KIT,GASKET	1	A,B,C,D,E,F,G,H,J ENGINE REPAIR INC.3,7,8 & etc.
3	N-KP510-00150	* GASKET,LIQUID	AR	A,B,C,D,E,F,G,H,J
4	N-08120-8451E	BOLT	6	A,B,C,D,E,F,G,H,J
5	N-08120-8251E	BOLT	3	A,B,C,D,E,F,G,H,J
6	N-13501-50K00	COVER	1	A,B,C,D,E,F,G,H,J
7	N-13042-A3510	* SEAL	1	A,B,C,D,E,F,G,H,J
8	N-KP710-00150	* GASKET,LIQUID	AR	A,B,C,D,E,F,G,H,J
9	N-08120-8251E	BOLT	9	A,B,C,D,E,F,G,H,J
10	N-12320-50K20	HOUSING,FLYWHEEL	1	A,B,C,D,E,F,G,H,J
11	N-12313-L1122	PIN,DOWEL	2	A,B,C,D,E,F,G,H,J
12	N-30412-K7320	BOLT	4	A,B,C,D,E,F,G,H,J
13	N-30413-61700	DOWEL	2	A,B,C,E,F,G,H,J
14	N-12322-K7320	WASHER	4	A,B,C,D,E,F,G,H,J
15	N-12325-L1122	CAP	1	D
16	N-30415-K4306	SEAL,OIL	1	D
17	N-08911-2081A	NUT	6	A,B,C,D,E,F,G,H,J
18	N-08915-3381A	WASHER	6	A,B,C,D,E,F,G,H,J

C-7 FLYWHEEL HOUSING & TIMING GEAR COVER

A :H15KA4GR00	D :H20KA4GR01	G :H20KA4GR04	K :H25KA4GR00	N :H25KA4GR03
B :H15KA4GR03	E :H20KA4GR02	H :H20KA4GR05	L :H25KA4GR01	P :H25KA4GR60
C :H20KA4GR00	F :H20KA4GR03	J :H20KA4GR06	M :H25KA4GR02	Q :H25KA4GR61

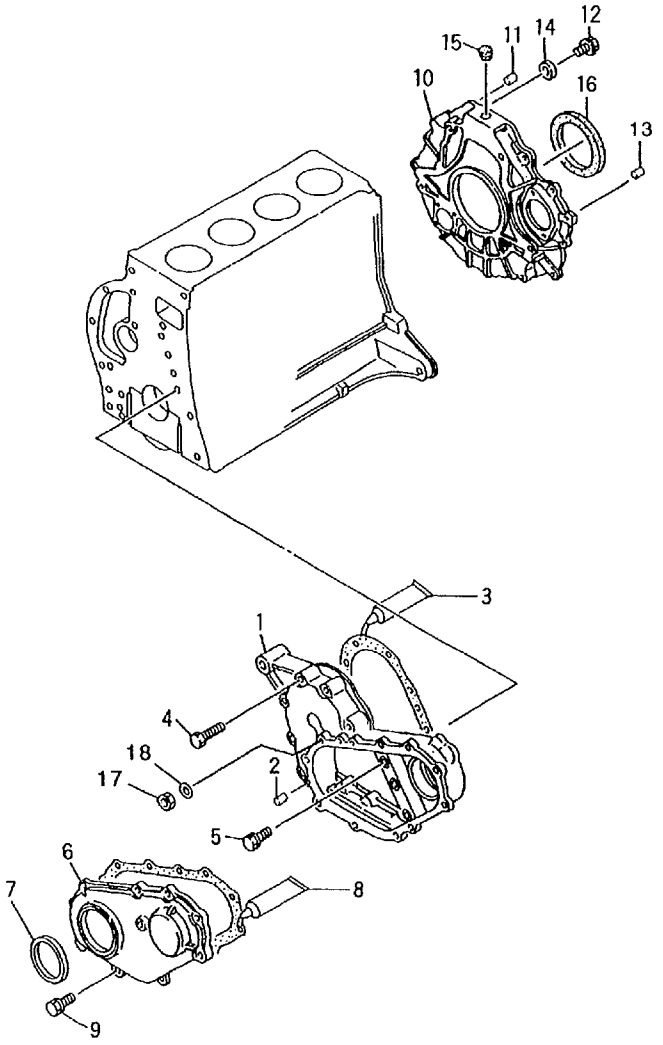

No.	Part No.	Description	Req'd	Remarks · Serial No.
1	N-13034-50K00	CASE	1	K,L,M,N,P,Q
2	N-11046-73402	DOWEL	1	K,L,M,N,P,Q
K	N-10101-50K25	KIT,GASKET	1	K,L,M,N,P,Q
				ENGINE REPAIR
				INC.3,7,8 & etc.
3	N-KP510-00150	* GASKET,LIQUID	AR	K,L,M,N,P,Q
4	N-08120-8451E	BOLT	6	K,L,M,N,P,Q
5	N-08120-8251E	BOLT	3	K,L,M,N,P,Q
6	N-13501-50K00	COVER	1	K,L,M,N,P,Q
7	N-13042-A3510	* SEAL	1	K,L,M,N,P,Q
8	N-KP710-00150	* GASKET,LIQUID	AR	K,L,M,N,P,Q
9	N-08120-8251E	BOLT	9	K,L,M,N,P,Q
10	N-12320-50K20	HOUSING,FLYWHEEL	1	K,L,M,N,P,Q
11	N-12313-L1122	PIN,DOWEL	2	K,L,M,N,P,Q
12	N-30412-K7320	SOCKET	4	K,L,M,N,P,Q
13	N-30413-61700	DOWEL	2	K,M,N,P,Q
14	N-12322-K7320	WASHER	4	K,L,M,N,P,Q
15	N-12325-L1122	CAP	1	L
16	N-30415-K4306	SEAL,OIL	1	L
17	N-08911-2081A	NUT	6	K,L,M,N,P,Q
18	N-08915-3381A	WASHER	6	K,L,M,N,P,Q

C-8 PISTON,CRANKSHAFT & FLYWHEEL

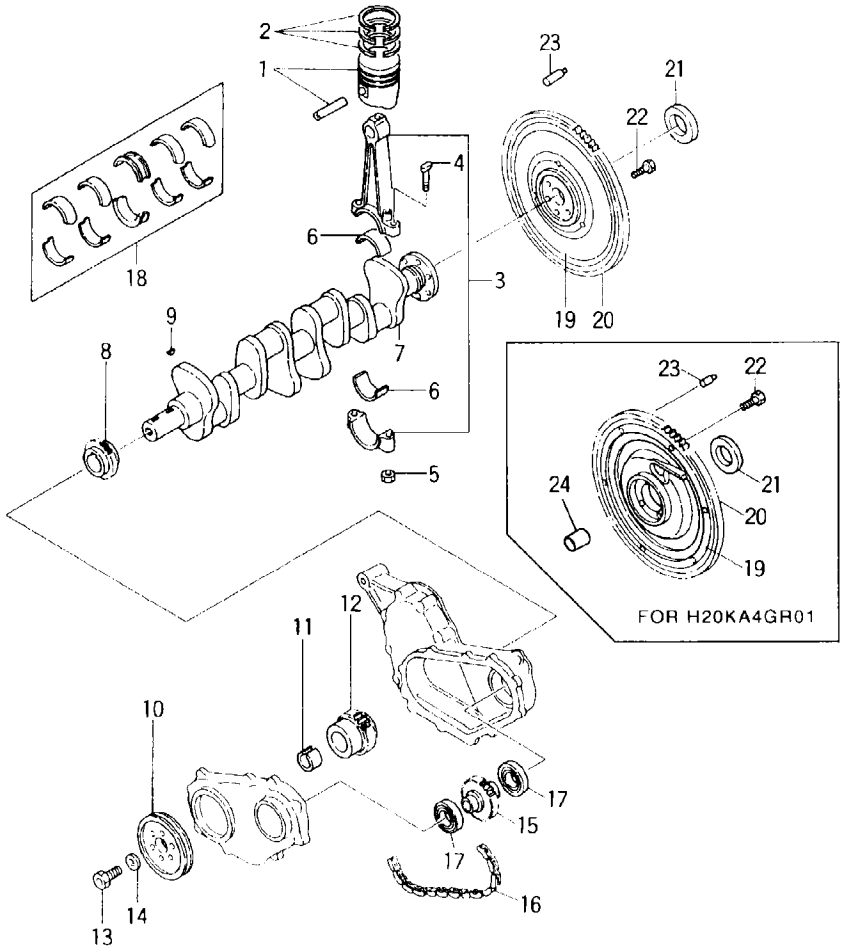

A :H15KA4GR00 D :H20KA4GR01 G :H20KA4GR04 K :H25KA4GR00 N :H25KA4GR03
B :H15KA4GR03 E :H20KA4GR02 H :H20KA4GR05 L :H25KA4GR01 P :H25KA4GR60
C :H20KA4GR00 F :H20KA4GR03 J :H20KA4GR06 M :H25KA4GR02 Q :H25KA4GR61

No.	Part No.	Description	Req'd	Remarks · Serial No.
1	N-12010-55K00	PISTON	4	A,B STD
-	N-12010-55K70	PISTON,0.5	4	A,B
-	N-12010-55K71	PISTON,1.0	4	A,B
-	N-12010-55K72	PISTON,1.5	4	A,B
-	N-12010-50K00	SET,PISTON	4	C,D,E,F,G,H,J STD
-	N-12010-50K70	PISTON,0.5	4	C,D,E,F,G,H,J
-	N-12010-50K71	PISTON,1.0	4	C,D,E,F,G,H,J
-	N-12010-50K72	PISTON,1.5	4	C,D,E,F,G,H,J
2	N-12033-55K00	SET,RING	1	A,B STD
-	N-12035-55K00	SET,RING	1	A,B O.S.=0.50
-	N-12036-55K00	SET,RING	1	A,B O.S.=1.00
-	N-12037-55K00	SET,RING	1	A,B O.S.=1.50
-	N-12033-50K00	KIT,RING	1	C,D,E,F,G,H,J STD
-	N-12035-50K00	SET,RING	1	C,D,E,F,G,H,J O.S.=0.50
-	N-12036-50K00	SET,RING	1	C,D,E,F,G,H,J O.S.=1.00
-	N-12037-50K00	SET,RING	1	C,D,E,F,G,H,J O.S.=1.50
3	N-12100-50K00	ROD,CONNECTING	4	A,B,C,D,E,F,G,H,J INC.4,5
4	N-12109-D0210	BOLT	8	A,B,C,D,E,F,G,H,J
5	N-12112-H1000	NUT	8	A,B,C,D,E,F,G,H,J
6	N-12111-D2800	BEARING	8	A,B,C,D,E,F,G,H,J STD
-	N-12112-D2800	BEARING,U.S.=0.08	8	A,B,C,D,E,F,G,H,J
-	N-12113-D2800	BEARING,U.S.=0.12	8	A,B,C,D,E,F,G,H,J
-	N-12114-D2800	BEARING,U.S.=0.25	8	A,B,C,D,E,F,G,H,J
7	N-12200-50K00	SHAFT,CRANK	1	A,B,C,D,E,F,G,H,J -1996.12
-	N-12201-50K00	SHAFT,CRANK	1	A,B,C,D,E,F,G,H,J 1997.1-
8	N-13021-03G00	SPROCKET	1	A,B,C,D,E,F,G,H,J
9	N-00926-51600	KEY	2	A,B,C,D,E,F,G,H,J
10	N-12303-50K00	PULLEY	1	A,B,C,D,E,F,G,H,J
11	N-12307-50K00	WEDGE	1	A,B,C,D,E,F,G,H,J
12	N-12351-50K00	SPROCKET	1	A,B,C,D,E,F,G,H,J -1996.8

C-9 PISTON,CRANKSHAFT & FLYWHEEL

A :H15KA4GR00 D :H20KA4GR01 G :H20KA4GR04 K :H25KA4GR00 N :H25KA4GR03
B :H15KA4GR03 E :H20KA4GR02 H :H20KA4GR05 L :H25KA4GR01 P :H25KA4GR60
C :H20KA4GR00 F :H20KA4GR03 J :H20KA4GR06 M :H25KA4GR02 Q :H25KA4GR61

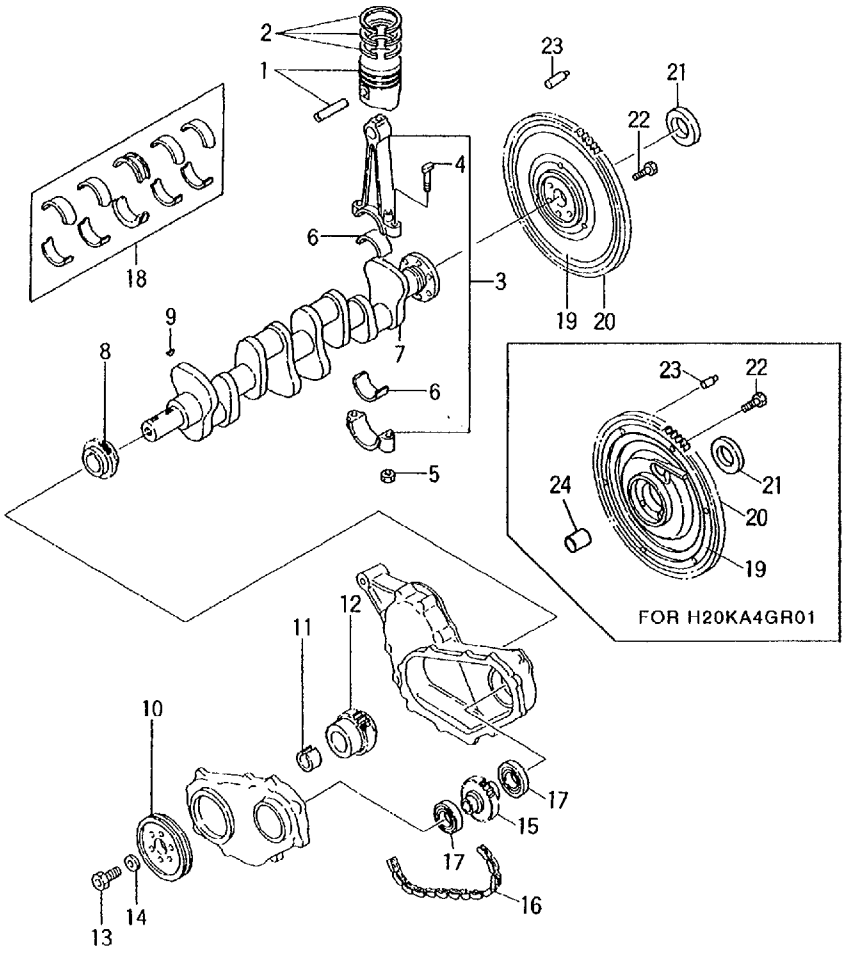

No.	Part No.	Description	Req'd	Remarks · Serial No.	
12	N-12351-50K10	SPROCKET	1	A,B,C,D,E,F,G,H,J 1996.9-	
13	N-12309-29S00	BOLT	1	A,B,C,D,E,F,G,H,J	
14	N-12308-W3400	WASHER	1	A,B,C,D,E,F,G,H,J	
15	N-12353-50K00	SPROCKET	1	A,B,C,D,E,F,G,H,J -1996.8	
-	N-12353-50K10	SPROCKET	1	A,B,C,D,E,F,G,H,J 1996.9-	
16	N-12352-00H00	CHAIN	1	A,B,C,D,E,F,G,H,J	
17	N-12354-50K00	BRG,BALL	2	A,B,C,D,E,F,G,H,J	
18	N-12207-50K00	KIT,BEARING	1	A,B,C,D,E,F,G,H,J	STD
-	N-12208-50K00	SET,BEARING,0.02	1	A,B,C,D,E,F,G,H,J	
-	N-12209-50K00	SET,BEARING,0.25	1	A,B,C,D,E,F,G,H,J	
-	N-12210-50K00	SET,BEARING,0.5	1	A,B,C,D,E,F,G,H,J	
-	N-12211-50K00	SET,BEARING,0.75	1	A,B,C,D,E,F,G,H,J	
-	N-12212-50K00	SET,BEARING,1.0	1	A,B,C,D,E,F,G,H,J	
19	N-12310-K8760	FLYWHEEL	1	A,B,C,E,F,G,H,J INC.20,23 -1995.11	
-	N-12310-K9600	FLYWHEEL	1	A,B,C,D,E,F,G,H,J INC.20,23 1995.12-	
-	N-12310-K8770	FLYWHEEL	1	D INC.20,23 -1995.11	
-	N-12310-K9601	FLYWHEEL	1	D INC.20,23 1995.12-	
20	N-12312-50K00	GEAR,RING	1	A,B,C,D,E,F,G,H,J	
21	N-21170-69900	BRG,BALL	1	A,B,C,D,E,F,G,H,J -1995.11	
-	N-21170-K9300	BRG,BALL	1	A,B,C,D,E,F,G,H,J 1995.12-	
22	N-12315-58S00	BOLT	6	A,B,C,D,E,F,G,H,J	
23	N-12313-10600	DOWEL	3	A,B,C,D,E,F,G,H,J	
24	N-32202-K9160	BUSHING	1	D	

C-10 PISTON,CRANKSHAFT & FLYWHEEL

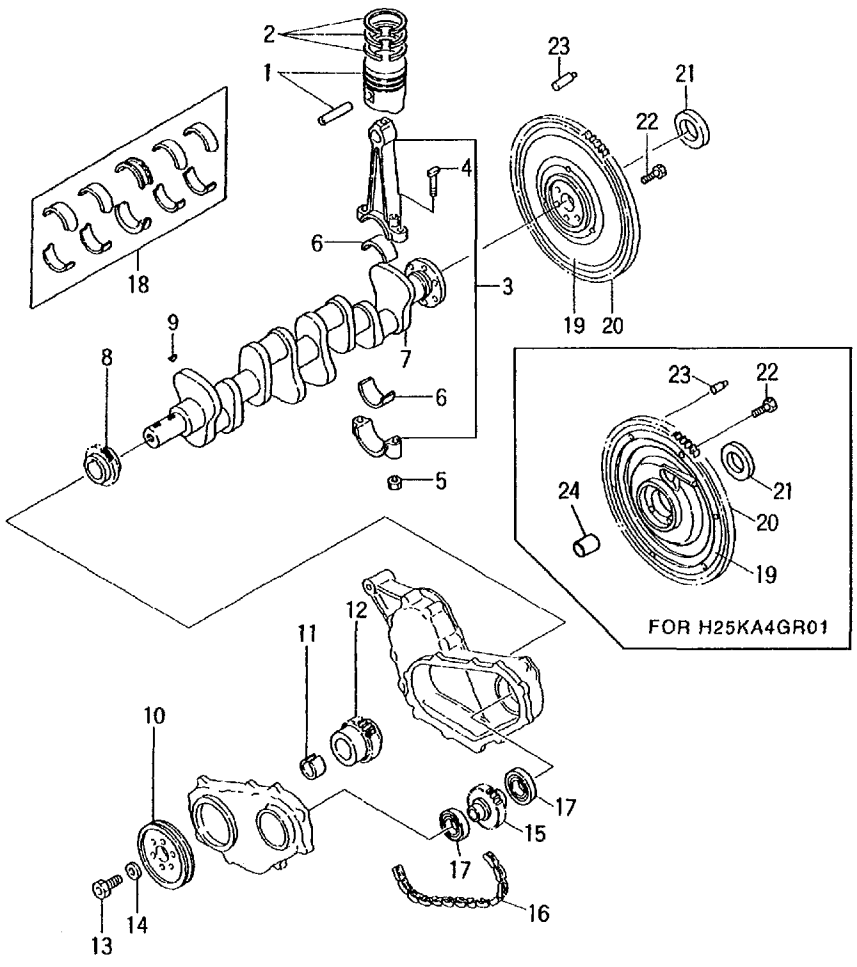

A :H15KA4GR00 D :H20KA4GR01 G :H20KA4GR04 K :H25KA4GR00 N :H25KA4GR03
B :H15KA4GR03 E :H20KA4GR02 H :H20KA4GR05 L :H25KA4GR01 P :H25KA4GR60
C :H20KA4GR00 F :H20KA4GR03 J :H20KA4GR06 M :H25KA4GR02 Q :H25KA4GR61

No.	Part No.	Description	Req'd	Remarks · Serial No.
1	N-12010-60K00	PISTON	4	K,L,M,N,P,Q STD
-	N-12010-60K70	PISTON,0.5	4	K,L,M,N,P,Q
-	N-12010-60K71	PISTON,1.0	4	K,L,M,N,P,Q
-	N-12010-60K72	PISTON,1.5	4	K,L,M,N,P,Q
2	N-12033-60K00	SET,RING	1	K,L,M,N,P,Q STD
-	N-12035-60K00	SET,RING	1	K,L,M,N,P,Q O.S.=0.50
-	N-12036-60K00	SET,RING	1	K,L,M,N,P,Q O.S.=1.00
-	N-12037-60K00	SET,RING	1	K,L,M,N,P,Q O.S.=1.50
3	N-12100-60K00	ROD	4	K,L,M,N,P,Q INC.4,5
4	N-12109-40F00	BOLT	8	K,L,M,N,P,Q
5	N-12112-40F00	NUT	8	K,L,M,N,P,Q
6	N-12111-85G00	BEARING	8	K,L,M,N,P,Q STD
-	N-12121-85G00	BEARING	8	K,L,M,N,P,Q U.S.=0.06
-	N-12122-85G00	BEARING	8	K,L,M,N,P,Q U.S.=0.12
-	N-12117-85G00	BEARING	8	K,L,M,N,P,Q U.S.=0.25
7	N-12200-60K00	SHAFT,CRANK	1	K,L,M,N,P,Q -1996.12
-	N-12201-60K00	SHAFT,CRANK	1	K,L,M,N,P,Q 1997.1-
8	N-13021-03G00	SPROCKET	1	K,L,M,N,P,Q
9	N-00926-51600	KEY	2	K,L,M,N,P,Q
10	N-12303-50K00	PULLEY	1	K,L,M,N,P,Q
11	N-12307-50K00	WEDGE	1	K,L,M,N,P,Q
12	N-12351-50K00	SPROCKET	1	K,L,M,N,P,Q -1996.8
-	N-12351-50K10	SPROCKET	1	K,L,M,N,P,Q 1996.9-
13	N-12309-29S00	BOLT	1	K,L,M,N,P,Q
14	N-12308-W3400	WASHER	1	K,L,M,N,P,Q

C-11 PISTON,CRANKSHAFT & FLYWHEEL

A :H15KA4GR00 D :H20KA4GR01 G :H20KA4GR04 K :H25KA4GR00 N :H25KA4GR03
B :H15KA4GR03 E :H20KA4GR02 H :H20KA4GR05 L :H25KA4GR01 P :H25KA4GR60
C :H20KA4GR00 F :H20KA4GR03 J :H20KA4GR06 M :H25KA4GR02 Q :H25KA4GR61

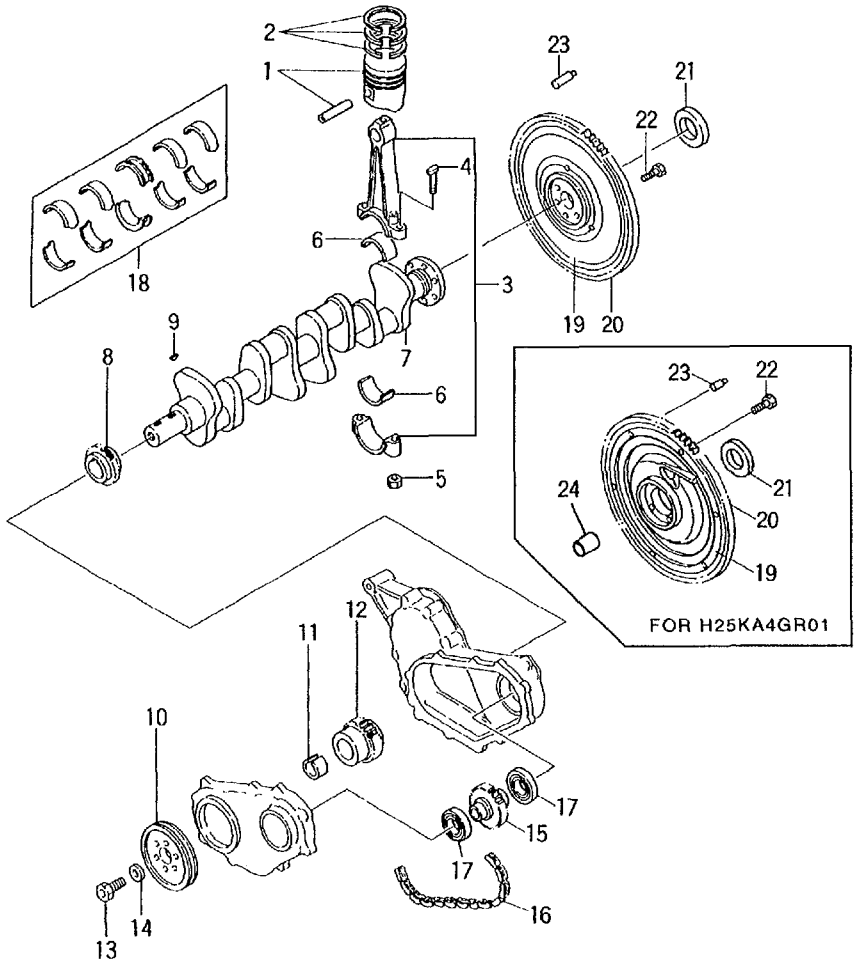

No.	Part No.	Description	Req'd	Remarks • Serial No.
15	N-12353-50K00	SPROCKET	1	K,L,M,N,P,Q -1996.8
-	N-12353-50K10	SPROCKET	1	K,L,M,N,P,Q 1996.9-
16	N-12352-00H00	CHAIN	1	K,L,M,N,P,Q
17	N-12354-50K00	BRG,BALL	2	K,L,M,N,P,Q
18	N-12207-50K00	KIT,BEARING	1	K,L,M,N,P,Q STD
-	N-12208-50K00	SET,BEARING,0.02	1	K,L,M,N,P,Q
-	N-12209-50K00	SET,BEARING,0.25	1	K,L,M,N,P,Q
-	N-12210-50K00	SET,BEARING,0.5	1	K,L,M,N,P,Q
-	N-12211-50K00	SET,BEARING,0.75	1	K,L,M,N,P,Q
-	N-12212-50K00	SET,BEARING,1.0	1	K,L,M,N,P,Q
19	N-12310-K8760	FLYWHEEL	1	K,M,N,P,Q INC.20,23 -1995.11
-	N-12310-K9600	FLYWHEEL	1	K,M,N,P,Q INC.20,23 1995.12-
-	N-12310-K8770	FLYWHEEL	1	L INC.20,23 -1995.11
-	N-12310-K9601	FLYWHEEL	1	L INC.20,23 1995.12-
20	N-12312-50K00	GEAR,RING	1	K,L,M,N,P,Q
21	N-21170-69900	BRG,BALL	1	K,L,M,N,P,Q -1995.11
-	N-21170-K9300	BRG,BALL	1	K,L,M,N,P,Q 1995.12-
22	N-12315-58S00	BOLT	6	K,L,M,N,P,Q
23	N-12313-10600	DOWEL	3	K,L,M,N,P,Q
24	N-32202-K9160	BUSHING	1	L

C-12 ENGINE BODY VENTILATION

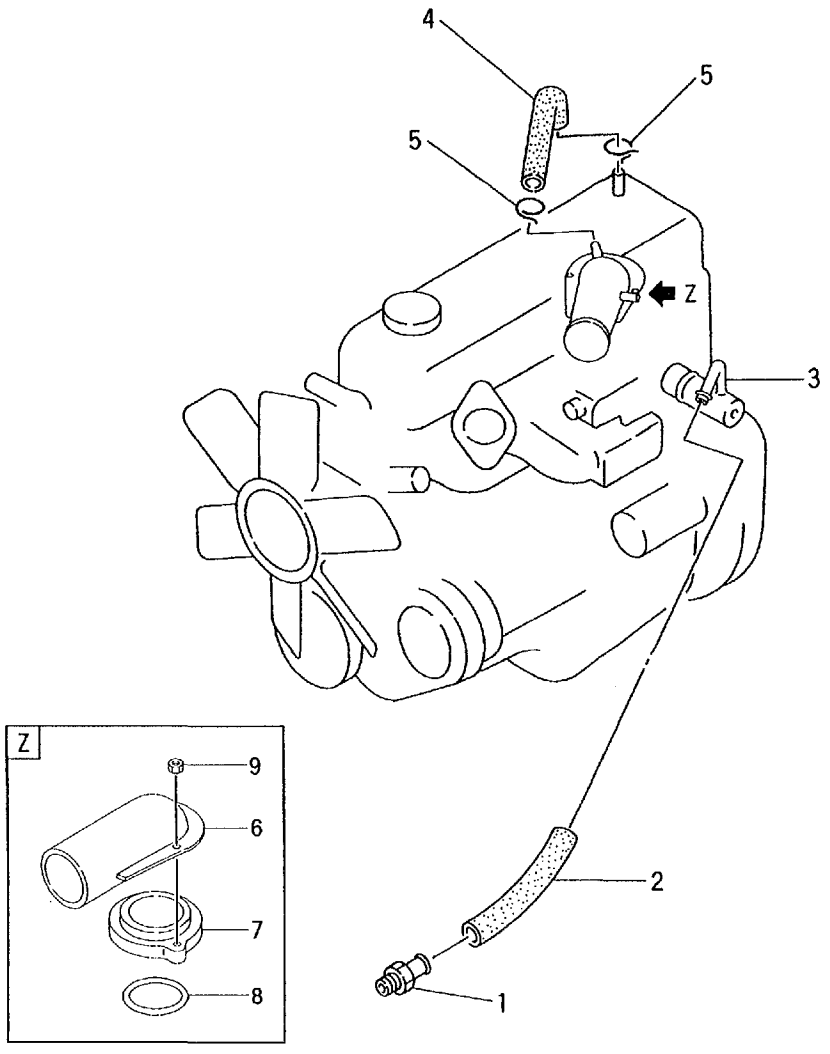

A :H15KA4GR00 D :H20KA4GR01 G :H20KA4GR04 K :H25KA4GR00 N :H25KA4GR03
B :H15KA4GR03 E :H20KA4GR02 H :H20KA4GR05 L :H25KA4GR01 P :H25KA4GR60
C :H20KA4GR00 F :H20KA4GR03 J :H20KA4GR06 M :H25KA4GR02 Q :H25KA4GR61

No.	Part No.	Description	Req'd	Remarks • Serial No.
1	N-11810-A3501	VALVE	1	A,B,C,D,E,F,G,H,J
2	N-11828-50K00	HOSE	1	A,B,C,D,E,F,G,H,J
3	N-11830-50K00	SEPARATOR	1	A,B,C,D,E,F,G,H,J
4	N-11826-50K00	HOSE	1	A,B,C,D,E,F,J
5	N-16439-10B00	CLAMP	2	A,B,C,D,E,F,G,H,J
6	N-16267-50K00	HORN,AIR	1	A,B,C,D,E,F,H,J
-	N-16267-00H01	PIPE,HORN	1	G
7	N-16578-50K00	SPACER	1	A,B,C,D,E,F,H,J
8	N-16569-50K10	O-RING	1	A,B,C,D,E,F,H,J
9	N-08911-10637	NUT	2	A,B,C,D,E,F,H,J

C-13 ENGINE BODY VENTILATION

A :H15KA4GR00	D :H20KA4GR01	G :H20KA4GR04	K :H25KA4GR00	N :H25KA4GR03
B :H15KA4GR03	E :H20KA4GR02	H :H20KA4GR05	L :H25KA4GR01	P :H25KA4GR60
C :H20KA4GR00	F :H20KA4GR03	J :H20KA4GR06	M :H25KA4GR02	Q :H25KA4GR61

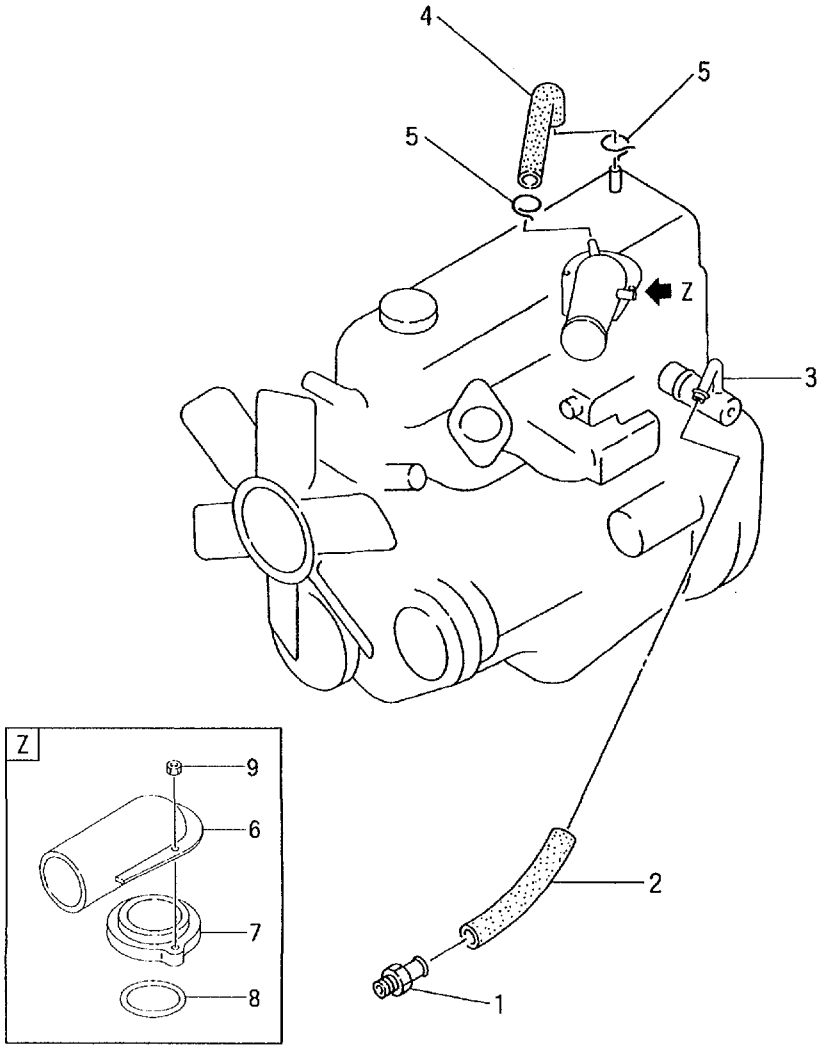

No.	Part No.	Description	Req'd	Remarks • Serial No.
1	N-11810-A3501	VALVE	1	K,L,M,N,P,Q
2	N-11828-50K00	HOSE	1	K,L,M,N,P,Q
3	N-11830-50K00	SEPARATOR	1	K,L,M,N,P,Q
4	N-11826-50K00	HOSE	1	K,L,M,N,P,Q
5	N-16439-10B00	CLAMP	2	K,L,M,N,P,Q
6	N-16267-50K00	HORN,AIR	1	K,L,M,N,P,Q
7	N-16578-50K00	SPACER	1	K,L,M,N,P,Q
8	N-16569-50K10	O-RING	1	K,L,M,N,P,Q
9	N-08911-10637	NUT	2	K,L,M,N,P,Q

D-2 CYLINDER HEAD & ROCKER COVER

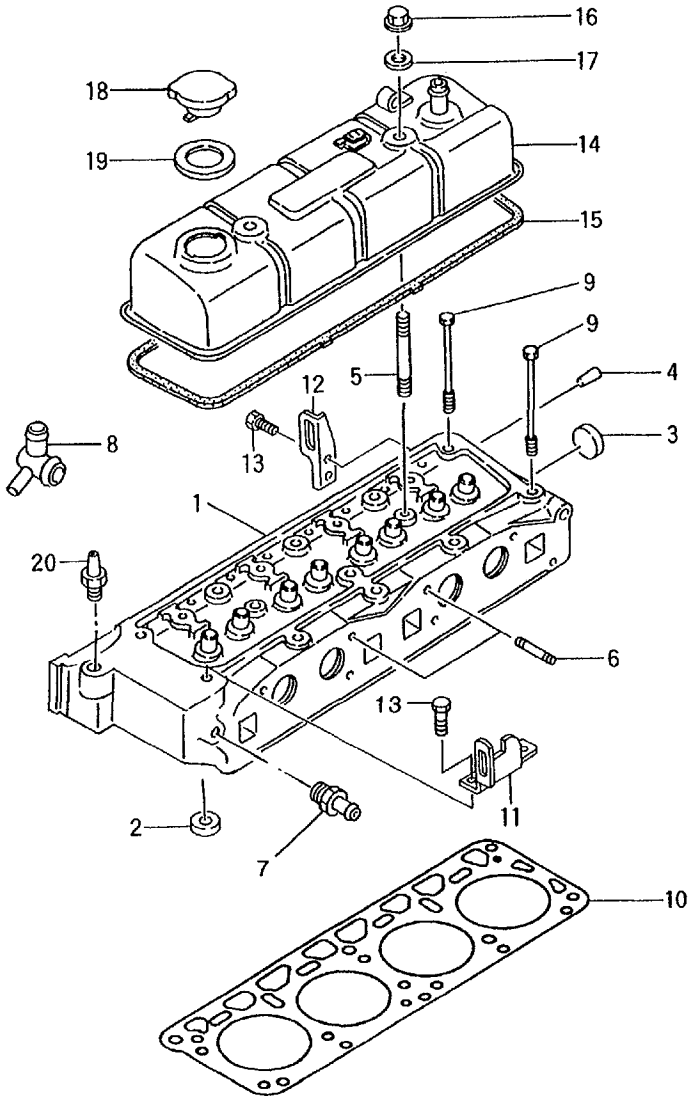

A :H15KA4GR00 D :H20KA4GR01 G :H20KA4GR04 K :H25KA4GR00 N :H25KA4GR03
B :H15KA4GR03 E :H20KA4GR02 H :H20KA4GR05 L :H25KA4GR01 P :H25KA4GR60
C :H20KA4GR00 F :H20KA4GR03 J :H20KA4GR06 M :H25KA4GR02 Q :H25KA4GR61

No.	Part No.	Description	Req'd	Remarks • Serial No.
1	N-11040-55K02	HEAD,CYL	1	A,B INC.2-4
-	N-11040-50K02	HEAD,CYL	1	C,D,E,F,G,H,J INC.2-4
2	N-11099-50K02	SEAT	8	A,B,C,D,E,F,G,H,J
3	N-00933-1351A	PLUG	1	A,B,C,D,E,F,G,H,J
4	N-11065-30000	PIN	4	A,B,C,D,E,F,G,H,J
5	N-11063-Y4400	STUD	2	A,B,C,D,E,F,G,H,J
6	N-08223-83210	STUD	4	A,B,C,D,E,F,G,H,J
7	N-14049-76001	CONNECTOR	1	A,B,C,D,E,F,G,H,J
8	N-11060-50K00	OUTLET	1	A,C,D,E,F,G,H,J
9	N-11057-H5010	BOLT	10	A,B,C,D,E,F,G,H,J -1998.8
-	N-11057-H5000	BOLT	10	A,B,C,D,E,F,G,H,J 1998.9-
10	N-11044-55K00	GASKET	1	A,B
-	N-11044-50K00	GASKET	1	C,D,E,F,G,H,J
11	N-10005-50K01	SLINGER	1	A,B,C,D,E,F,G,H,J
12	N-10005-1E400	SLINGER	1	A,B,C,D,E,F,G,H,J
13	N-08121-0201E	BOLT	4	A,B,C,D,E,F,G,H,J
14	N-13264-50K00	COVER	1	A,B,C,D,E,F,G,H,J -1998.8
-	N-13264-50K01	COVER	1	A,B,C,D,E,F,G,H,J 1998.9-
K1	N-10101-50K25	KIT,GASKET	1	A,B,C,D,E,F,G,H,J ENGINE REPAIR INC.15,19 & etc.
K2	N-11042-50K25	KIT,GASKET	1	A,B,C,D,E,F,G,H,J VALVE REGRIND INC.15 & etc.
15	N-13270-E3400	* PACKING	1	A,B,C,D,E,F,G,H,J
16	N-13274-B1101	NUT	2	A,B,C,D,E,F,G,H,J
17	N-13275-E0720	WASHER	2	A,B,C,D,E,F,G,H,J
18	N-15255-85550	CAP	1	A,B,C,D,E,F,G,H,J INC.19
19	N-15270-B3400	* PACKING	1	A,B,C,D,E,F,G,H,J
20	N-25080-89903	SENSOR	1	A,B,C,D,E,F,G,H,J

D-3 CYLINDER HEAD & ROCKER COVER

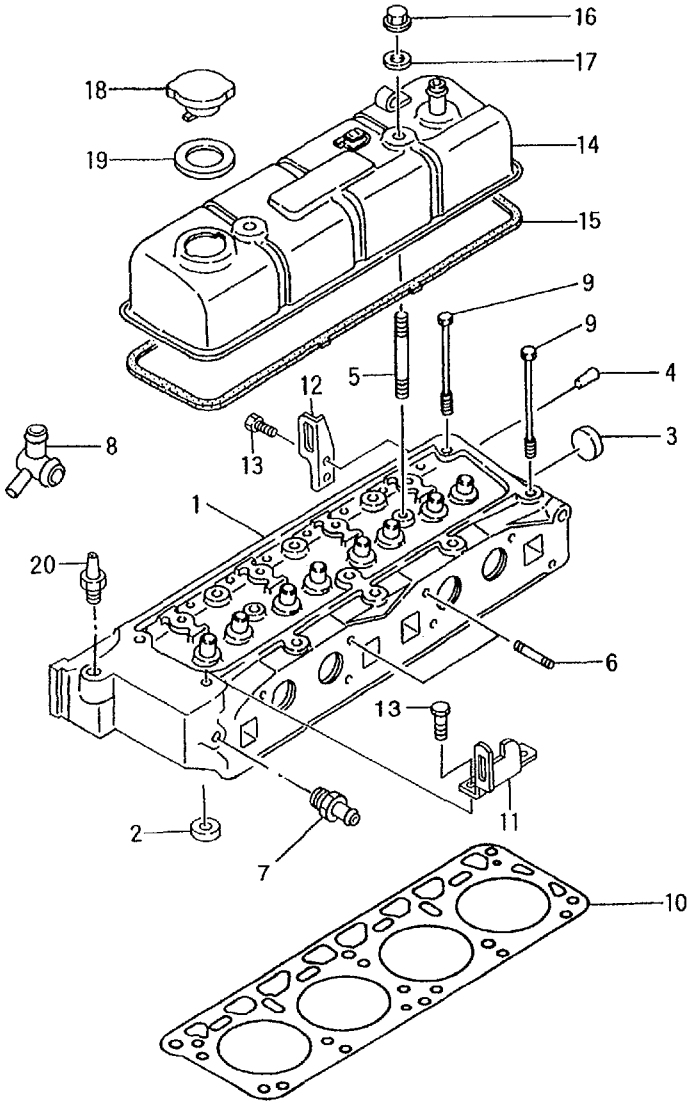

A :H15KA4GR00 D :H20KA4GR01 G :H20KA4GR04 K :H25KA4GR00 N :H25KA4GR03
B :H15KA4GR03 E :H20KA4GR02 H :H20KA4GR05 L :H25KA4GR01 P :H25KA4GR60
C :H20KA4GR00 F :H20KA4GR03 J :H20KA4GR06 M :H25KA4GR02 Q :H25KA4GR61

No.	Part No.	Description	Req'd	Remarks • Serial No.
1	N-11040-60K02	HEAD,CYL	1	K,L,M,N,P,Q INC.2-4
2	N-11099-50K02	SEAT	8	K,L,M,N,P,Q
3	N-00933-1351A	PLUG	1	K,L,M,N,P,Q
4	N-11065-30000	PIN	4	K,L,M,N,P,Q
5	N-11063-Y4400	STUD	2	K,L,M,N,P,Q
6	N-08223-83210	STUD	4	K,L,M,N,P,Q
7	N-14049-76001	CONNECTOR	1	K,L,M,N,P,Q
8	N-11060-50K00	OUTLET	1	K,L,M,N,P,Q
9	N-11057-H5010	BOLT	10	K,L,M,N,P,Q -1998.8
-	N-11057-H5000	BOLT	10	K,L,M,N,P,Q 1998.9-
10	N-11044-60K00	GASKET	1	K,L,M,N,P,Q
11	N-10005-50K01	SLINGER	1	K,L,M,N,P,Q
12	N-10005-1E400	SLINGER	1	K,L,M,N,P,Q
13	N-08121-0201E	BOLT	4	K,L,M,N,P,Q
14	N-13264-50K00	COVER	1	K,L,M,N,P,Q -1998.8
-	N-13264-50K01	COVER	1	K,L,M,N,P,Q 1998.9-
K1	N-10101-50K25	KIT,GASKET	1	K,L,M,N,P,Q ENGINE REPAIR INC.15,19 & etc.
K2	N-11042-50K25	KIT,GASKET	1	K,L,M,N,P,Q VALVE REGRIND INC.15 & etc.
15	N-13270-E3400	* PACKING	1	K,L,M,N,P,Q
16	N-13274-B1101	NUT	2	K,L,M,N,P,Q
17	N-13275-E0720	WASHER	2	K,L,M,N,P,Q
18	N-15255-85550	CAP	1	K,L,M,N,P,Q INC.19
19	N-15270-B3400	* PACKING	1	K,L,M,N,P,Q
20	N-25080-89903	SENSOR	1	K,L,M,N,P,Q

D-4 CAMSHAFT & VALVE MECHANISM

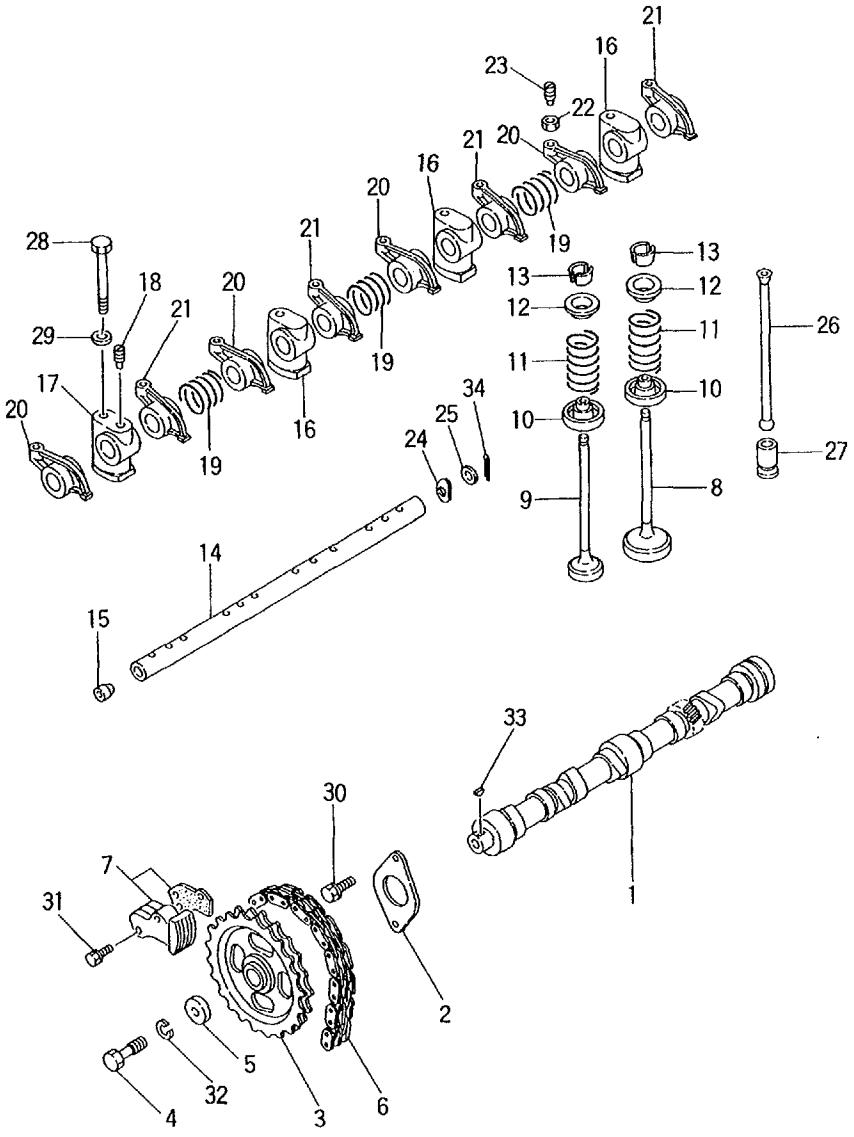

A :H15KA4GR00 D :H20KA4GR01 G :H20KA4GR04 K :H25KA4GR00 N :H25KA4GR03
B :H15KA4GR03 E :H20KA4GR02 H :H20KA4GR05 L :H25KA4GR01 P :H25KA4GR60
C :H20KA4GR00 F :H20KA4GR03 J :H20KA4GR06 M :H25KA4GR02 Q :H25KA4GR61

No.	Part No.	Description	Req'd	Remarks · Serial No.
1	N-13001-50K00	CAM SHAFT	1	A,B,C,D,E,F,G,H,J
2	N-13010-78201	PLATE	1	A,B,C,D,E,F,G,H,J
3	N-13024-50K00	SPROCKET	1	A,B,C,D,E,F,G,H,J
4	N-13012-78200	BOLT	1	A,B,C,D,E,F,G,H,J -1995.7
-	N-08171-0401A	BOLT	1	A,B,C,D,E,F,G,H,J 1995.8-
5	N-13013-78200	WASHER	1	A,B,C,D,E,F,G,H,J
6	N-13028-50K00	CHAIN	1	A,B,C,D,E,F,G,H,J
7	N-13070-50K00	TENSIONER	1	A,B,C,D,E,F,G,H,J
8	N-13201-50K00	VALVE	4	A,B,C,D,E,F,G,H,J
9	N-13202-50K02	VALVE	4	A,B,C,D,E,F,G,H,J
10	N-13207-53F00	SEAL	8	A,B,C,D,E,F,G,H,J
11	N-13203-50K00	SPRING	8	A,B,C,D,E,F,G,H,J
12	N-13209-01B00	RETAINER	8	A,B,C,D,E,F,G,H,J
13	N-13210-01M00	COLLET	16	A,B,C,D,E,F,G,H,J
14	N-13252-32200	SHAFT	1	A,B,C,D,E,F,G,H,J INC.15
15	N-13254-58000	PLUG	2	A,B,C,D,E,F,G,H,J
16	N-13222-78200	BRACKET	3	A,B,C,D,E,F,G,H,J
17	N-13223-78200	BRACKET	1	A,B,C,D,E,F,G,H,J
18	N-13226-78200	SCREW	1	A,B,C,D,E,F,G,H,J
19	N-13256-W0400	SPRING	3	A,B,C,D,E,F,G,H,J
20	N-13258-78201	ROCKER	4	A,B,C,D,E,F,G,H,J
21	N-13259-78201	ROCKER	4	A,B,C,D,E,F,G,H,J
22	N-13235-78200	NUT	8	A,B,C,D,E,F,G,H,J
23	N-13234-78200	SCREW	8	A,B,C,D,E,F,G,H,J
24	N-13255-58000	SPRING	2	A,B,C,D,E,F,G,H,J
25	N-13289-58000	WASHER	2	A,B,C,D,E,F,G,H,J
26	N-13238-12200	ROD,PUSH	8	A,B,C,D,E,F,G,H,J
27	N-13231-H1001	LIFTER	8	A,B,C,D,E,F,G,H,J
28	N-13224-78200	BOLT	4	A,B,C,D,E,F,G,H,J
29	N-08915-4401A	WASHER	4	A,B,C,D,E,F,G,H,J
30	N-08120-61628	BOLT	2	A,B,C,D,E,F,G,H,J
31	N-08120-63528	BOLT	2	A,B,C,D,E,F,G,H,J
32	N-08915-1401A	WASHER	1	A,B,C,D,E,F,G,H,J
33	N-00926-41610	KEY	1	A,B,C,D,E,F,G,H,J
34	N-00921-22500	PIN	2	A,B,C,D,E,F,G,H,J

D-5 CAMSHAFT & VALVE MECHANISM

A :H15KA4GR00 D :H20KA4GR01 G :H20KA4GR04 K :H25KA4GR00 N :H25KA4GR03
B :H15KA4GR03 E :H20KA4GR02 H :H20KA4GR05 L :H25KA4GR01 P :H25KA4GR60
C :H20KA4GR00 F :H20KA4GR03 J :H20KA4GR06 M :H25KA4GR02 Q :H25KA4GR61

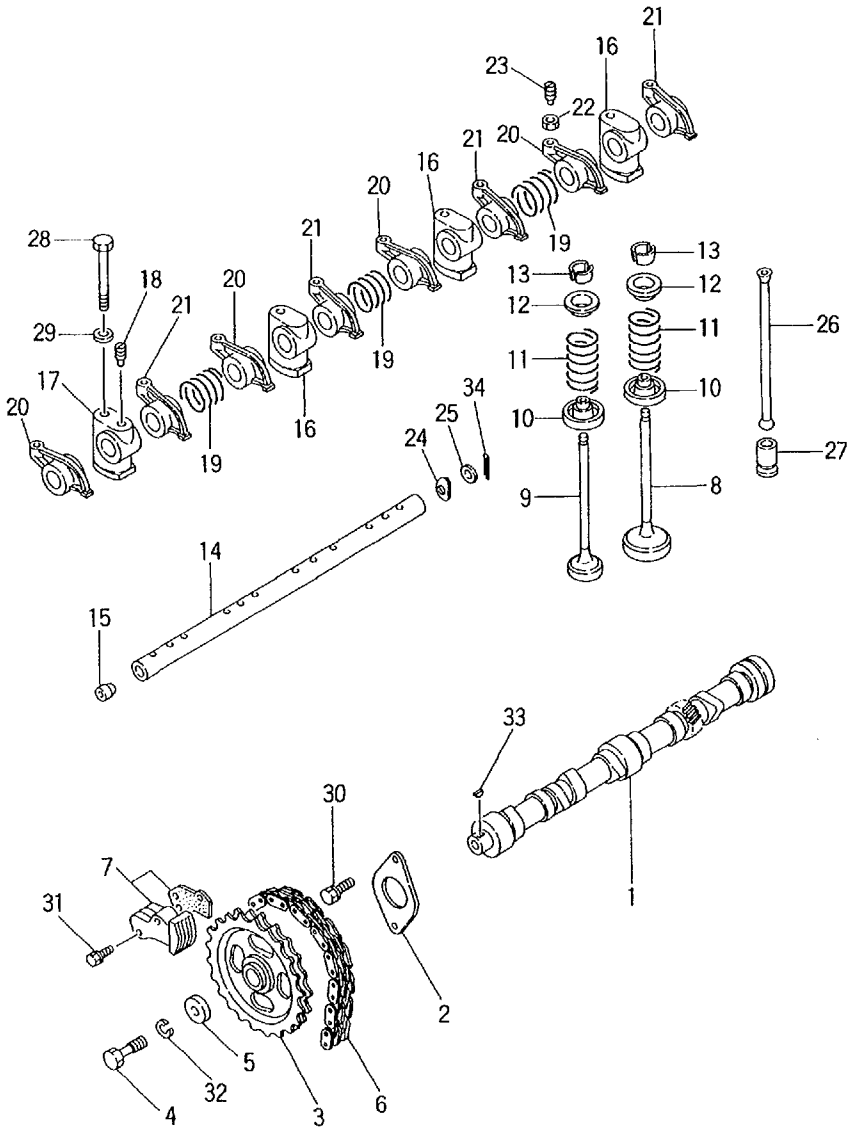

No.	Part No.	Description	Req'd	Remarks・Serial No.
1	N-13001-50K00	CAM SHAFT	1	K,L,M,N,P,Q
2	N-13010-78201	PLATE	1	K,L,M,N,P,Q
3	N-13024-50K00	SPROCKET	1	K,L,M,N,P,Q
4	N-13012-78200	BOLT	1	K,L,M,N,P,Q
				-1995.7
-	N-08171-0401A	BOLT	1	K,L,M,N,P,Q
				1995.8-
5	N-13013-78200	WASHER	1	K,L,M,N,P,Q
6	N-13028-50K00	CHAIN	1	K,L,M,N,P,Q
7	N-13070-50K00	TENSIONER	1	K,L,M,N,P,Q
8	N-13201-50K00	VALVE	4	K,L,M,N,P,Q
9	N-13202-50K02	VALVE	4	K,L,M,N,P,Q
10	N-13207-53F00	SEAL	8	K,L,M,N,P,Q
11	N-13203-50K00	SPRING	8	K,L,M,N,P,Q
12	N-13209-01B00	RETAINER	8	K,L,M,N,P,Q
13	N-13210-01M00	COLLET	16	K,L,M,N,P,Q
14	N-13252-32200	SHAFT	1	K,L,M,N,P,Q
				INC.15
15	N-13254-58000	PLUG	2	K,L,M,N,P,Q
16	N-13222-78200	BRACKET	3	K,L,M,N,P,Q
17	N-13223-78200	BRACKET	1	K,L,M,N,P,Q
18	N-13226-78200	SCREW	1	K,L,M,N,P,Q
19	N-13256-W0400	SPRING	3	K,L,M,N,P,Q
20	N-13258-78201	ROCKER	4	K,L,M,N,P,Q
21	N-13259-78201	ROCKER	4	K,L,M,N,P,Q
22	N-13235-78200	NUT	8	K,L,M,N,P,Q
23	N-13234-78200	SCREW	8	K,L,M,N,P,Q
24	N-13255-58000	SPRING	2	K,L,M,N,P,Q
25	N-13289-58000	WASHER	2	K,L,M,N,P,Q
26	N-13238-12200	ROD,PUSH	8	K,L,M,N,P,Q
27	N-13231-H1001	LIFTER	8	K,L,M,N,P,Q
28	N-13224-78200	BOLT	4	K,L,M,N,P,Q
29	N-08915-4401A	WASHER	4	K,L,M,N,P,Q
30	N-08120-61628	BOLT	2	K,L,M,N,P,Q
31	N-08120-63528	BOLT	2	K,L,M,N,P,Q
32	N-08915-1401A	WASHER	1	K,L,M,N,P,Q
33	N-00926-41610	KEY	1	K,L,M,N,P,Q
34	N-00921-22500	PIN	2	K,L,M,N,P,Q

E-2 EXHAUST MANIFOLD & INTAKE MANIFOLD

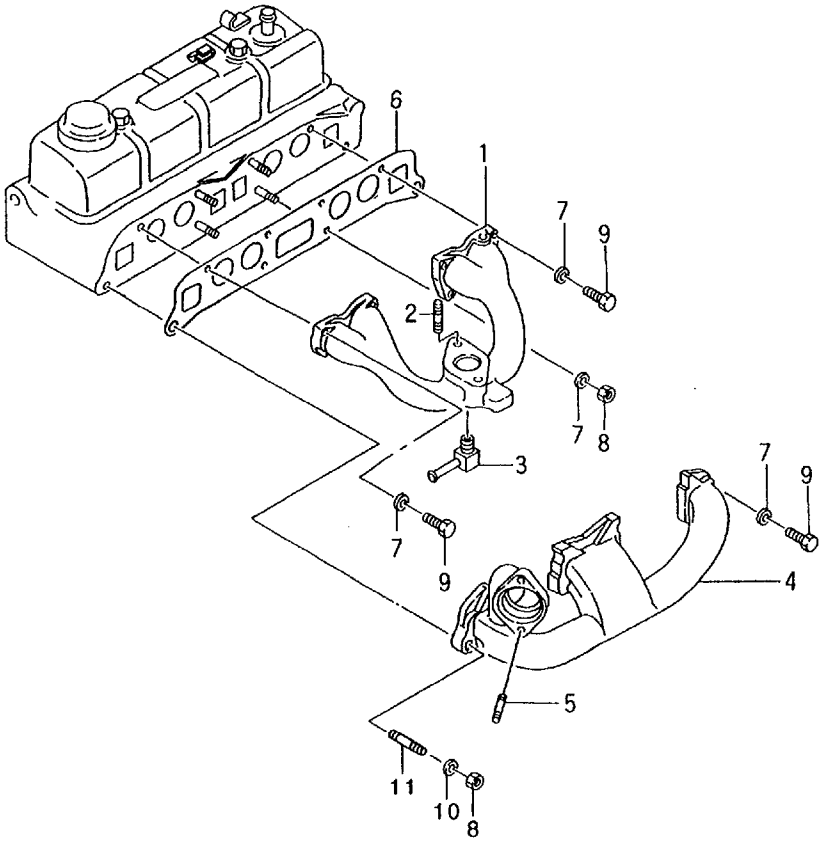

A :H15KA4GR00 D :H20KA4GR01 G :H20KA4GR04 K :H25KA4GR00 N :H25KA4GR03
B :H15KA4GR03 E :H20KA4GR02 H :H20KA4GR05 L :H25KA4GR01 P :H25KA4GR60
C :H20KA4GR00 F :H20KA4GR03 J :H20KA4GR06 M :H25KA4GR02 Q :H25KA4GR61

No.	Part No.	Description	Req'd	Remarks · Serial No.
1	N-14003-50K76	MANIFOLD,INTAKE	1	A,B,C,D,E,F,G,H,J
2	N-08223-8201A	STUD	2	A,B,C,D,E,F,G,H,J
3	N-14053-E0600	CONNECTOR	1	A,B,C,D,E,F,G,H,J
4	N-14004-L1101	MANIFOLD,EXHAUST	1	A,B,C,D,E,F,G,H,J
5	N-08223-83010	STUD	2	A,B,C,D,E,F,G,H,J
K1	N-10101-50K25	KIT,GASKET	1	A,B,C,D,E,F,G,H,J ENGINE REPAIR INC.6 & etc.
K2	N-11042-50K25	KIT,GASKET	1	A,B,C,D,E,F,G,H,J VALVE REGRIND INC.6 & etc.
6	N-14035-50K00	* GASKET	1	A,B,C,D,E,F,G,H,J
7	N-14037-32200	YOKE	7	A,B,C,D,E,F,G,H,J
8	N-08912-7081A	NUT	6	A,B,C,D,E,F,G,H,J
9	N-08120-8351A	BOLT	3	A,B,C,D,E,F,G,H,J
10	N-14037-E3000	WASHER	2	A,B,C,D,E,F,G,H,J
11	N-08223-83210	STUD	1	A,B,C,D,E,F,G,H,J

E-3 EXHAUST MANIFOLD & INTAKE MANIFOLD

A :H15KA4GR00	D :H20KA4GR01	G :H20KA4GR04	K :H25KA4GR00	N :H25KA4GR03
B :H15KA4GR03	E :H20KA4GR02	H :H20KA4GR05	L :H25KA4GR01	P :H25KA4GR60
C :H20KA4GR00	F :H20KA4GR03	J :H20KA4GR06	M :H25KA4GR02	Q :H25KA4GR61

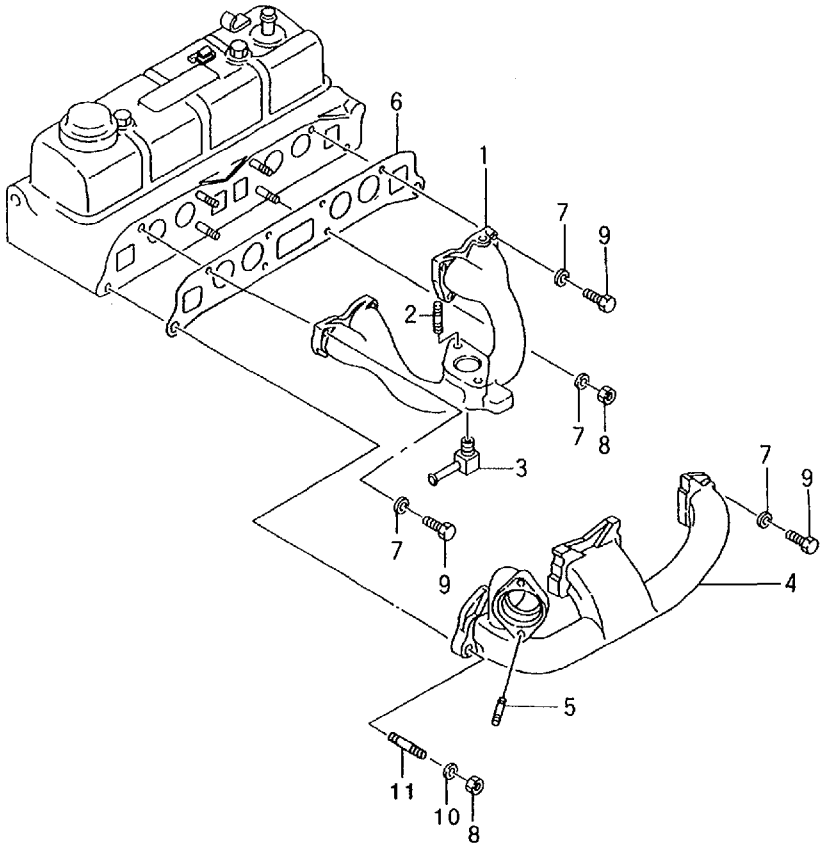

No.	Part No.	Description	Req'd	Remarks • Serial No.
1	N-14003-50K76	MANIFOLD,INTAKE	1	K,L,M,N,P,Q
2	N-08223-8201A	STUD	2	K,L,M,N,P,Q
3	N-14053-E0600	CONNECTOR	1	K,L,M,N,P,Q
4	N-14004-L1101	MANIFOLD,EXHAUST	1	K,L,M,N,P,Q
5	N-08223-83010	STUD	2	K,L,M,N,P,Q
K1	N-10101-50K25	KIT,GASKET	1	K,L,M,N,P,Q ENGINE REPAIR INC.6 & etc.
K2	N-11042-50K25	KIT,GASKET	1	K,L,M,N,P,Q VALVE REGRIND INC.6 & etc.
6	N-14035-50K00	* GASKET	1	K,L,M,N,P,Q
7	N-14037-32200	YOKE	7	K,L,M,N,P,Q
8	N-08912-7081A	NUT	6	K,L,M,N,P,Q
9	N-08120-8351A	BOLT	3	K,L,M,N,P,Q
10	N-14037-E3000	WASHER	2	K,L,M,N,P,Q
11	N-08223-83210	STUD	1	K,L,M,N,P,Q

F-2 LUBRICATING SYSTEM

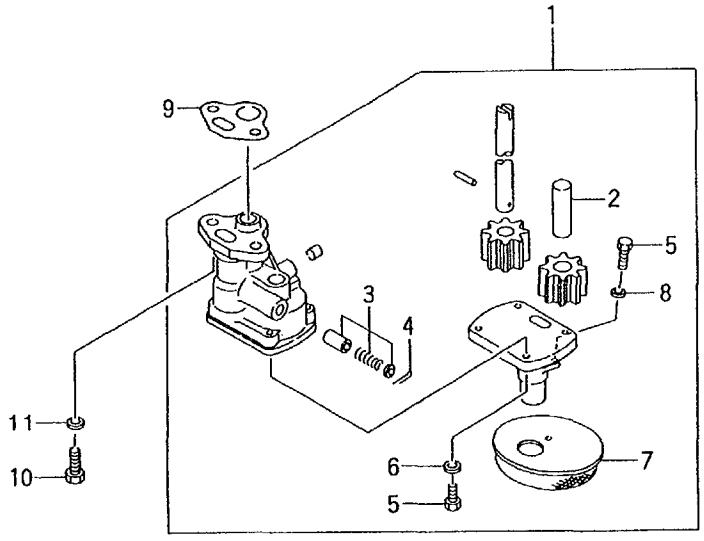

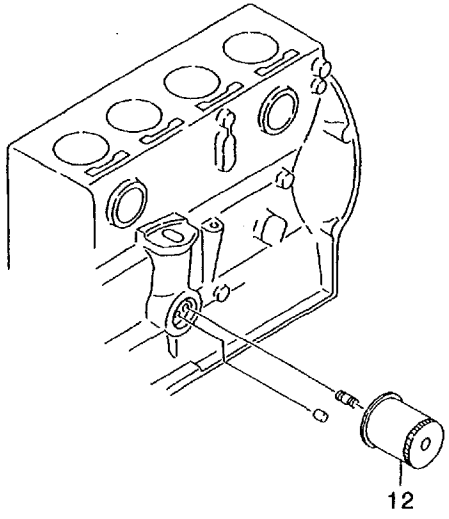

A :H15KA4GR00	D :H20KA4GR01	G :H20KA4GR04	K :H25KA4GR00	N :H25KA4GR03
B :H15KA4GR03	E :H20KA4GR02	H :H20KA4GR05	L :H25KA4GR01	P :H25KA4GR60
C :H20KA4GR00	F :H20KA4GR03	J :H20KA4GR06	M :H25KA4GR02	Q :H25KA4GR61

No.	Part No.	Description	Req'd	Remarks・Serial No.
1	N-15010-66202	PUMP,OIL,ENGINE	1	A,C,D,E,F,G,H,J INC.2-8
2	NO PART NO.	SHAFT,DRIVE	1	A,C,D,E,F,G,H,J
3	NO PART NO.	SET,VALVE	1	A,C,D,E,F,G,H,J
4	NO PART NO.	PIN,COTTER	1	A,C,D,E,F,G,H,J
5	N-08120-61410	BOLT	5	A,C,D,E,F,G,H,J
6	N-08916-13500	WASHER	4	A,C,D,E,F,G,H,J
7	NO PART NO.	STRAINER	1	A,C,D,E,F,G,H,J
8	N-08915-13600	WASHER	1	A,C,D,E,F,G,H,J
K	N-10101-50K25	KIT,GASKET	1	A,C,D,E,F,G,H,J ENGINE REPAIR INC.9 & etc.
9	N-15066-78200	* GASKET	1	A,C,D,E,F,G,H,J -1996.8
10	N-08120-8201E	BOLT	2	A,C,D,E,F,G,H,J
11	N-08915-1381A	WASHER	2	A,C,D,E,F,G,H,J
12	N-15208-01B01	FILTER,OIL	1	A,C,D,E,F,G,H,J

F-3 LUBRICATING SYSTEM

A :H15KA4GR00	D :H20KA4GR01	G :H20KA4GR04	K :H25KA4GR00	N :H25KA4GR03
B :H15KA4GR03	E :H20KA4GR02	H :H20KA4GR05	L :H25KA4GR01	P :H25KA4GR60
C :H20KA4GR00	F :H20KA4GR03	J :H20KA4GR06	M :H25KA4GR02	Q :H25KA4GR61

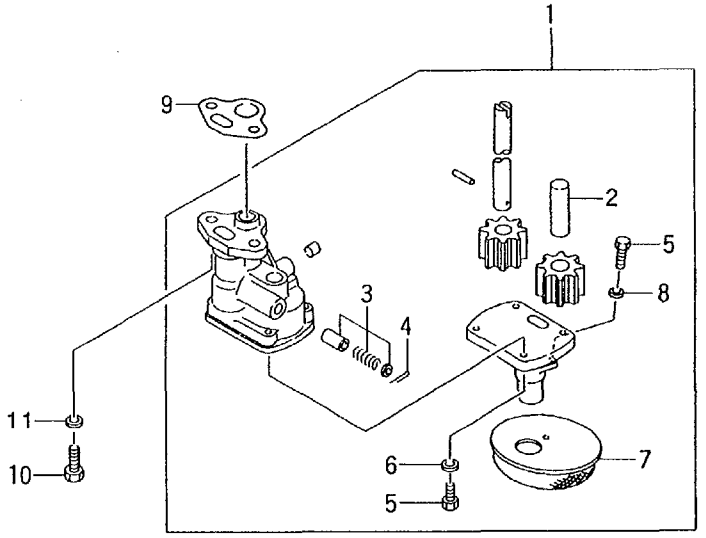

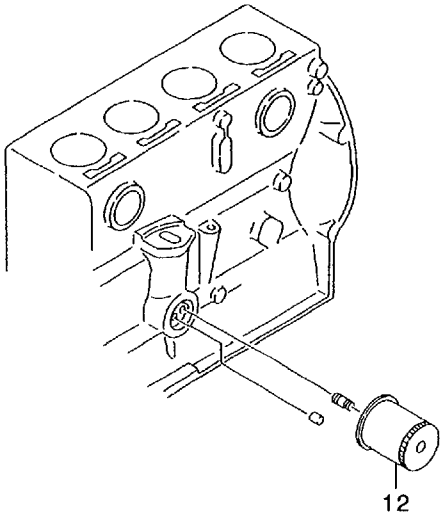

No.	Part No.	Description	Req'd	Remarks • Serial No.
1	N-15010-66202	PUMP,OIL,ENGINE	1	K,L,M,N,P,Q INC.2-8
2	NO PART NO.	SHAFT,DRIVE	1	K,L,M,N,P,Q
3	NO PART NO.	SET,VALVE	1	K,L,M,N,P,Q
4	NO PART NO.	PIN,COTTER	1	K,L,M,N,P,Q
5	N-08120-61410	BOLT	5	K,L,M,N,P,Q
6	N-08916-13500	WASHER	4	K,L,M,N,P,Q
7	NO PART NO.	STRAINER	1	K,L,M,N,P,Q
8	N-08915-13600	WASHER	1	K,L,M,N,P,Q
K	N-10101-50K25	KIT,GASKET	1	K,L,M,N,P,Q ENGINE REPAIR INC.9 & etc.
9	N-15066-78200	* GASKET	1	K,L,M,N,P,Q -1996.8
10	N-08120-8201E	BOLT	2	K,L,M,N,P,Q
11	N-08915-1381A	WASHER	2	K,L,M,N,P,Q
12	N-15208-01B01	FILTER,OIL	1	K,L,M,N,P,Q

G-2 WATER PUMP & THERMOSTAT

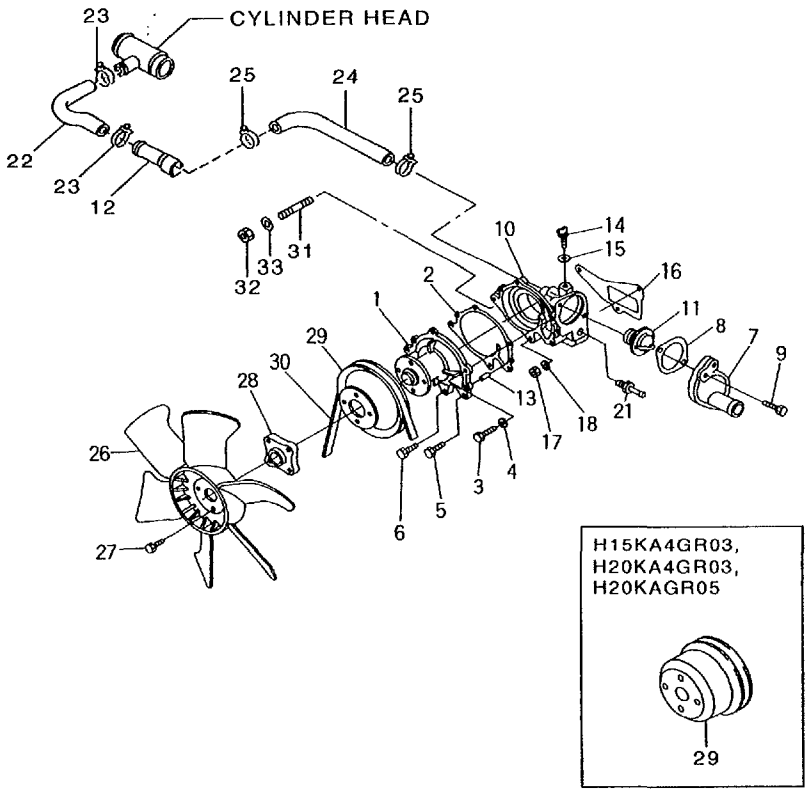

A :H15KA4GR00 D :H20KA4GR01 G :H20KA4GR04 K :H25KA4GR00 N :H25KA4GR03
B :H15KA4GR03 E :H20KA4GR02 H :H20KA4GR05 L :H25KA4GR01 P :H25KA4GR60
C :H20KA4GR00 F :H20KA4GR03 J :H20KA4GR06 M :H25KA4GR02 Q :H25KA4GR61

No.	Part No.	Description	Req'd	Remarks • Serial No.
1	N-21010-50K26	PUMP-ASSY,WATER	1	A,B,C,D,E,F,G,H,J INC.2
K1	N-10101-50K25	KIT,GASKET	1	A,B,C,D,E,F,G,H,J ENGINE REPAIR INC.2,8 & etc.
K2	N-11042-50K25	KIT,GASKET	1	A,B,C,D,E,F,G,H,J VALVE REGRIND INC.8 & etc.
2	N-21014-07N00	* GASKET	1	A,B,C,D,E,F,G,H,J
3	N-21079-50K00	BOLT	1	A,B,C,D,E,F,G,H,J
4	N-08915-2081A	WASHER	2	A,B,C,D,E,F,G,H,J
5	N-08120-8201E	BOLT	1	A,B,C,D,E,F,G,H,J
6	N-08120-62028	BOLT	3	A,B,C,D,E,F,G,H,J
7	N-11060-W7000	INLET	1	A,B,C,D,E,F,G,H,J
8	N-11062-07N00	* GASKET	1	A,B,C,D,E,F,G,H,J
9	N-08120-8301E	BOLT	2	A,B,C,D,E,F,G,H,J
10	N-11061-50K00	HOUSING	1	A,B,C,D,E,F,G,H,J
11	N-21200-50K00	THERMOSTAT	1	A,B,C,D,E,F,G,H,J
12	N-14075-40F04	CONNECTOR	1	A,B,C,D,E,F,G,H,J
13	N-11046-73402	DOWEL	2	A,B,C,D,E,F,G,H,J
14	N-21480-R0100	COCK	1	A,B,C,D,E,F,G,H,J
15	N-21481-18000	PACKING	1	A,B,C,D,E,F,G,H,J
16	N-11072-50K01	GASKET	1	A,B,C,D,E,F,G,H,J
17	N-08911-2081A	NUT	2	A,B,C,D,E,F,G,H,J
18	N-08915-3381A	WASHER	2	A,B,C,D,E,F,G,H,J
21	N-14049-76001	CONNECTOR	1	A,B,C,D,E,F,G,H,J
22	N-14080-50K00	HOSE	1	A,B,C,D,E,F,G,H,J
23	N-01555-00261	CLAMP	2	A,B,C,D,E,F,G,H,J
24	N-14055-50K01	HOSE	1	A,B,C,D,E,F,G,H,J
25	N-16439-42L00	CLAMP	2	A,B,C,D,E,F,G,H,J
26	N-21060-50K00	FAN	1	A,B,C,D,E,F,G,H,J
27	N-08120-64028	BOLT	4	A,B,C,D,E,F,G,H,J
28	N-21064-19000	SPACER	1	B
29	N-21051-20500	PULLEY	1	A,C,D,G,J
-	N-21051-00H00	PULLEY	1	E
-	N-21051-E0100	PULLEY	1	B,F,H
30	N-02117-00511	BELT	1	A,B,C,D,F,G,H,J
-	N-02117-03011	BELT	1	E
31	N-08223-82510	STUD	1	A,B,C,D,E,F,G,H,J
32	N-08911-2081A	NUT	1	A,B,C,D,E,F,G,H,J

G-3 WATER PUMP & THERMOSTAT

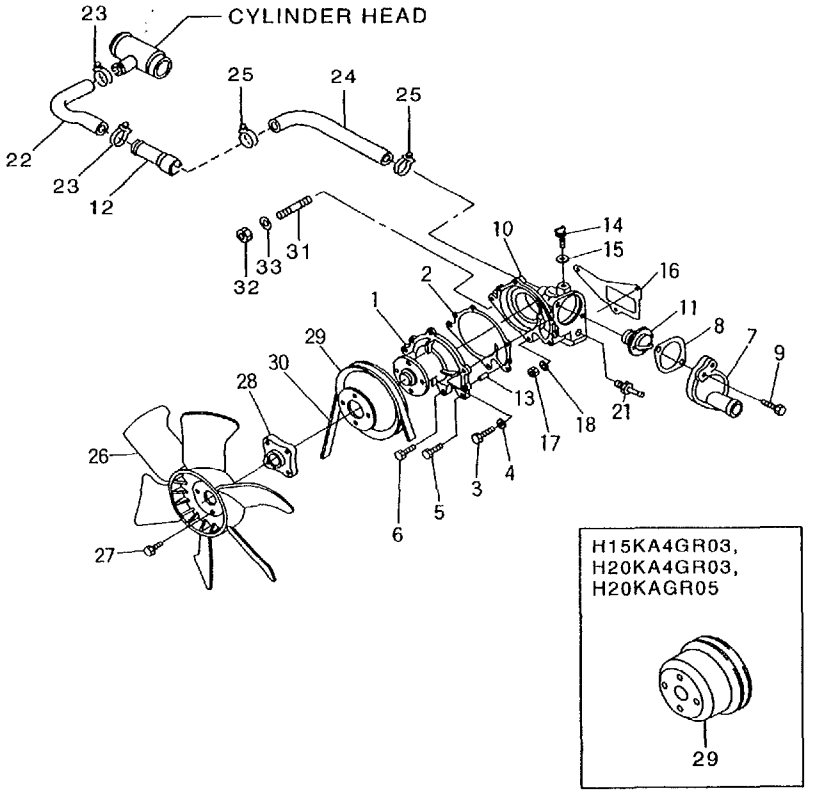

A :H15KA4GR00 D :H20KA4GR01 G :H20KA4GR04 K :H25KA4GR00 N :H25KA4GR03
B :H15KA4GR03 E :H20KA4GR02 H :H20KA4GR05 L :H25KA4GR01 P :H25KA4GR60
C :H20KA4GR00 F :H20KA4GR03 J :H20KA4GR06 M :H25KA4GR02 Q :H25KA4GR61

No.	Part No.	Description	Req'd	Remarks • Serial No.
33	N-08915-3381A	WASHER	1	A,B,C,D,E,F,G,H,J

G-4 WATER PUMP & THERMOSTAT

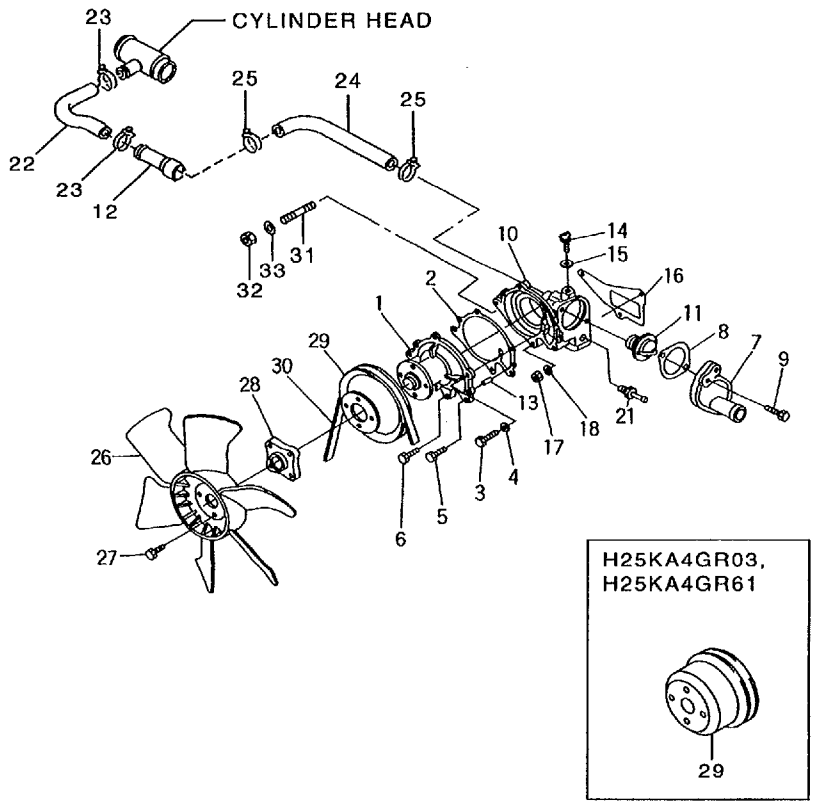

A :H15KA4GR00 D :H20KA4GR01 G :H20KA4GR04 K :H25KA4GR00 N :H25KA4GR03
B :H15KA4GR03 E :H20KA4GR02 H :H20KA4GR05 L :H25KA4GR01 P :H25KA4GR60
C :H20KA4GR00 F :H20KA4GR03 J :H20KA4GR06 M :H25KA4GR02 Q :H25KA4GR61

No.	Part No.	Description	Req'd	Remarks · Serial No.
1	N-21010-50K26	PUMP-ASSY,WATER	1	K,L,M,N INC.2
-	N-21010-50K01	PUMP-ASSY,WATER	1	P,Q INC.2
K1	N-10101-50K25	KIT,GASKET	1	K,L,M,N,P,Q ENGINE REPAIR INC.2,8 & etc.
K2	N-11042-50K25	KIT,GASKET	1	K,L,M,N,P,Q VALVE REGRIND INC.8 & etc.
2	N-21014-07N00	* GASKET	1	K,L,M,N,P,Q
3	N-21079-50K00	BOLT	1	K,L,M,N
-	N-21079-K9760	BOLT	1	P,Q
4	N-08915-2081A	WASHER	2	K,L,M,N,P,Q
5	N-08120-8201E	BOLT	1	K,L,M,N,P,Q
6	N-08120-62028	BOLT	3	K,L,M,N,P,Q
7	N-11060-W7000	INLET	1	K,L,M,N,P,Q
8	N-11062-07N00	* GASKET	1	K,L,M,N,P,Q
9	N-08120-8301E	BOLT	2	K,L,M,N,P,Q
10	N-11061-50K00	HOUSING	1	K,L,M,N
-	N-11061-K9760	HOUSING	1	P,Q
11	N-21200-50K00	THERMOSTAT	1	K,L,M,N,P,Q
12	N-14075-40F04	CONNECTOR	1	K,L,M,N,P,Q
13	N-11046-73402	DOWEL	2	K,L,M,N,P,Q
14	N-21480-R0100	COCK	1	K,L,M,N,P,Q
15	N-21481-18000	PACKING	1	K,L,M,N,P,Q
16	N-11072-50K01	GASKET	1	K,L,M,N,P,Q
17	N-08911-2081A	NUT	2	K,L,M,N,P,Q
18	N-08915-3381A	WASHER	2	K,L,M,N,P,Q
21	N-14049-76001	CONNECTOR	1	K,L,M,N,P,Q
22	N-14080-50K00	HOSE	1	K,L,M,N,P,Q
23	N-01555-00261	CLAMP	2	K,L,M,N,P,Q
24	N-14055-50K01	HOSE	1	K,L,M,N,P,Q
25	N-16439-42L00	CLAMP	2	K,L,M,N,P,Q
26	N-21060-50K00	FAN	1	K,L,M,N,P,Q
27	N-08120-64028	BOLT	4	K,L,M,N,P,Q
29	N-21051-20500	PULLEY	1	K,L,P
-	N-21051-00H00	PULLEY	1	M
-	N-21051-E0100	PULLEY	1	N,Q
30	N-02117-00511	BELT	1	K,L,N

G-5 WATER PUMP & THERMOSTAT

A :H15KA4GR00 D :H20KA4GR01 G :H20KA4GR04 K :H25KA4GR00 N :H25KA4GR03
B :H15KA4GR03 E :H20KA4GR02 H :H20KA4GR05 L :H25KA4GR01 P :H25KA4GR60
C :H20KA4GR00 F :H20KA4GR03 J :H20KA4GR06 M :H25KA4GR02 Q :H25KA4GR61

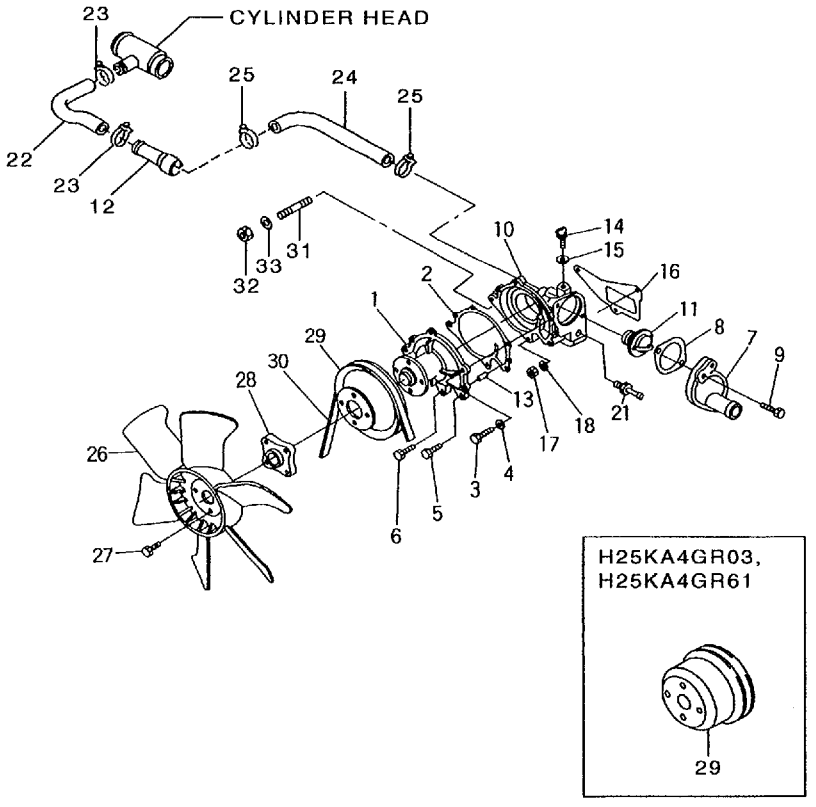

No.	Part No.	Description	Req'd	Remarks・Serial No.
30	N-02117-03011	BELT	1	M
-	N-11720-K4080	BELT	1	P L=1190
-	N-11720-K9100	BELT	1	Q L=1164

H-2 CABURETOR(FITTING PARTS)

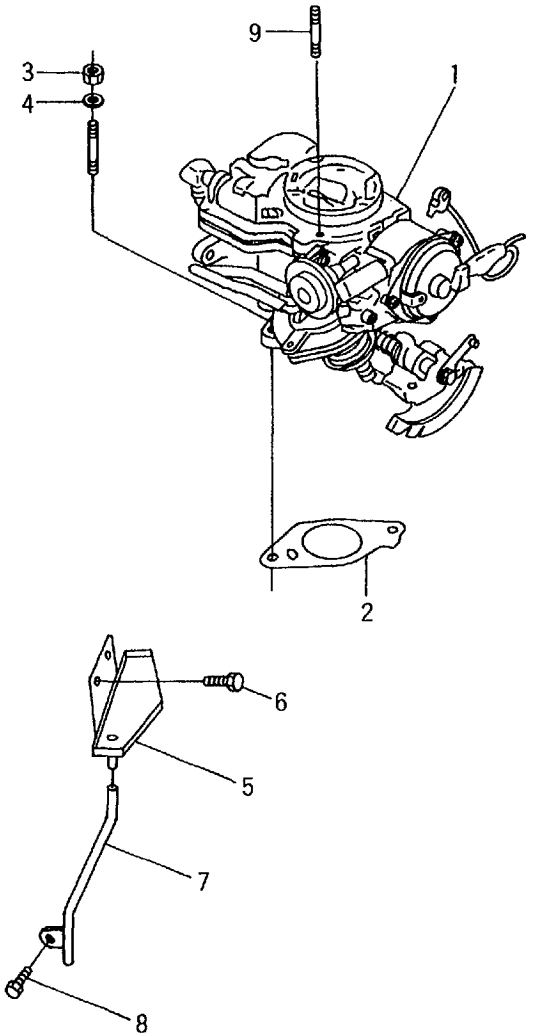

A :H15KA4GR00 D :H20KA4GR01 G :H20KA4GR04 K :H25KA4GR00 N :H25KA4GR03
B :H15KA4GR03 E :H20KA4GR02 H :H20KA4GR05 L :H25KA4GR01 P :H25KA4GR60
C :H20KA4GR00 F :H20KA4GR03 J :H20KA4GR06 M :H25KA4GR02 Q :H25KA4GR61

No.	Part No.	Description	Req'd	Remarks • Serial No.
1	N-16010-55K01	CARBURETOR	1	A,B SEE LOC.H-4
-	N-16010-50K01	CARBURETOR	1	C,D,E,F,J SEE LOC.H-4
K	N-10101-50K25	KIT,GASKET	1	A,B,C,D,E,H,Q ENGINE REPAIR INC.2 & etc.
2	N-16174-50K10	* INSULATOR	1	A,B,C,D,E,F,J
3	N-08911-2081A	NUT	2	A,B,C,D,E,F,J
4	N-08915-3381A	WASHER	2	A,B,C,D,E,F,J
5	N-14330-50K65	PLATE	1	A,B,C,D,E,F,J
6	N-08340-60810	SCREW	2	A,B,C,D,E,F,J
7	N-16318-50K67	TUBE	1	A,B,C,D,E,F,J
8	N-08120-61228	BOLT	1	A,B,C,D,E,F,J
9	N-08216-64510	STUD	2	A,B,C,D,E,F,J

H-3 CABURETOR(FITTING PARTS)

A :H15KA4GR00 D :H20KA4GR01 G :H20KA4GR04 K :H25KA4GR00 N :H25KA4GR03
B :H15KA4GR03 E :H20KA4GR02 H :H20KA4GR05 L :H25KA4GR01 P :H25KA4GR60
C :H20KA4GR00 F :H20KA4GR03 J :H20KA4GR06 M :H25KA4GR02 Q :H25KA4GR61

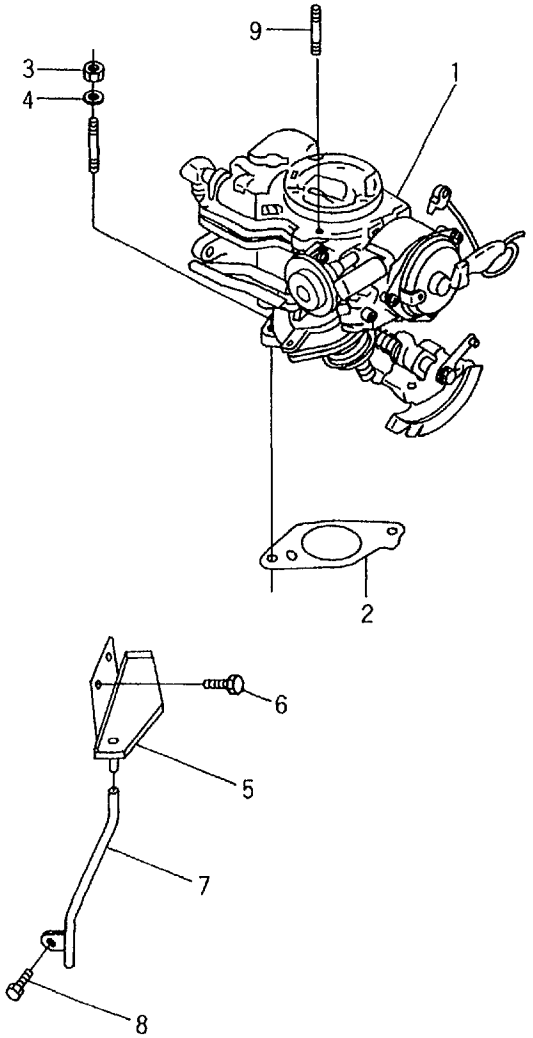

No.	Part No.	Description	Req'd	Remarks • Serial No.
1	N-16010-60K01	CARBURETOR	1	K,L,M,N,P,Q SEE LOC.H-6
K	N-10101-50K25	KIT,GASKET	1	K,L,M,N,P,Q ENGINE REPAIR INC.2 & etc.
2	N-16174-50K10	* INSULATOR	1	K,L,M,N,P,Q
3	N-08911-2081A	NUT	2	K,L,M,N,P,Q
4	N-08915-3381A	WASHER	2	K,L,M,N,P,Q
5	N-14330-50K65	PLATE	1	K,L,M,N,P,Q
6	N-08340-60810	SCREW	2	K,L,M,N,P,Q
7	N-16318-50K67	TUBE	1	K,L,M,N,P,Q
8	N-08120-61228	BOLT	1	K,L,M,N,P,Q
9	N-08216-64510	STUD	2	K,L,M,N,P,Q

H-4 CARBURETOR(INNER PARTS)

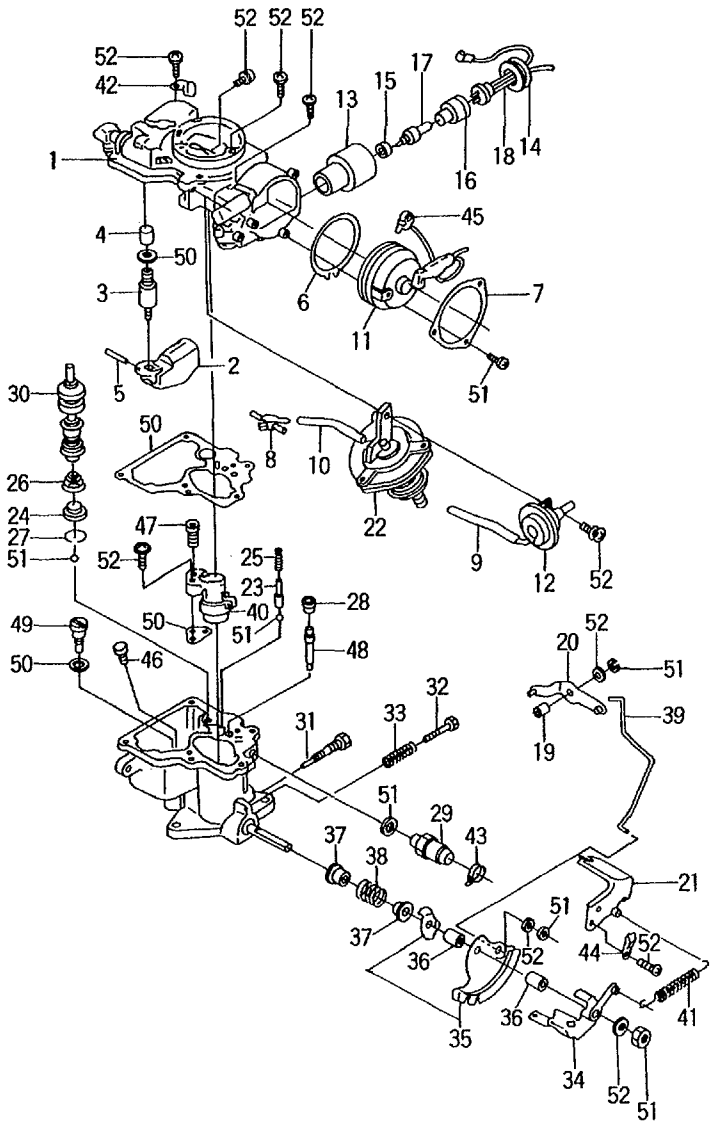

A :H15KA4GR00 D :H20KA4GR01 G :H20KA4GR04 K :H25KA4GR00 N :H25KA4GR03
B :H15KA4GR03 E :H20KA4GR02 H :H20KA4GR05 L :H25KA4GR01 P :H25KA4GR60
C :H20KA4GR00 F :H20KA4GR03 J :H20KA4GR06 M :H25KA4GR02 Q :H25KA4GR61

No.	Part No.	Description	Req'd	Remarks • Serial No.
A1	N-16010-55K01	CARBURETOR	1	A,B INC.1-52
A2	N-16010-50K01	CARBURETOR	1	C,D,E,F,J INC.1-52
1	N-16266-55K01	CHAMBER,CHOKE	1	A,B INC.2-20,22
-	N-16266-50K01	CHAMBER,CHOKE	1	C,D,E,F,J INC.2-20,22
2	N-16061-55K00	FLOAT	1	A,B,C,D,E,F,J
K1	N-20801-0C091	* KIT,REPAIR	1	A,B INC.3,4,24,25,27,30,48-52
K2	N-20801-0C101	* KIT,REPAIR	1	C,D,E,F,J INC.3,4,24,25,27,30,48-52
3	N-16101-53L02	* VALVE	1	A,B,C,D,E,F,J INC.4
4	N-16098-D0100	* FILTER	1	A,B,C,D,E,F,J
5	N-16827-85G00	PIN	1	A,B,C,D,E,F,J
6	N-16390-50Y00	PLATE	1	A,B,C,D,E,F,J
7	N-16390-01M01	PLATE	1	A,B,C,D,E,F,J
8	N-16267-55K00	CONNECTOR	1	A,B,C,D,E,F,J
9	N-16520-50K00	PIPE	1	A,B,C,D,E,F
10	N-16520-67G00	PIPE	1	A,B,C,D,E,F
11	N-16389-55K00	COVER	1	A,B,C,D,E,F,J
12	N-16199-55K00	PISTON	1	A,B,C,D,E,F,J
13	N-16391-55K00	ELEMENT	1	A,B,C,D,E,F,J INC.14-18
14	NO PART NO.	NUT	1	A,B,C,D,E,F,J
15	N-16392-W7000	STOPPER	2	A,B,C,D,E,F,J
16	N-16394-W7001	PTC	2	A,B,C,D,E,F,J
17	N-16393-50Y00	WAX	2	A,B,C,D,E,F,J
18	N-16396-55K00	WIRE-HARNESS	1	A,B,C,D,E,F,J
19	N-16217-50K00	COLLAR	1	A,B,C,D,E,F,J
20	N-16302-55K00	LEVER	1	A,B,C,D,E,F,J
21	N-16165-55K00	BRACKET	1	A,B,C,D,E,F,J
22	N-16313-60K01	CHAMBER,DIAPHRAGM	1	A,B
-	N-16313-60K00	CHAMBER,DIAPHRAGM	1	C,D,E,F,J
23	N-16071-01M00	WEIGHT	1	A,B,C,D,E,F,J
24	N-16245-11200	* STRAINER	1	A,B,C,D,E,F,J
25	N-16069-B8500	* SPRING	1	A,B,C,D,E,F,J
26	N-16148-50Y00	SPRING	1	A,B,C,D,E,F,J

H-5 CARBURETOR(INNER PARTS)

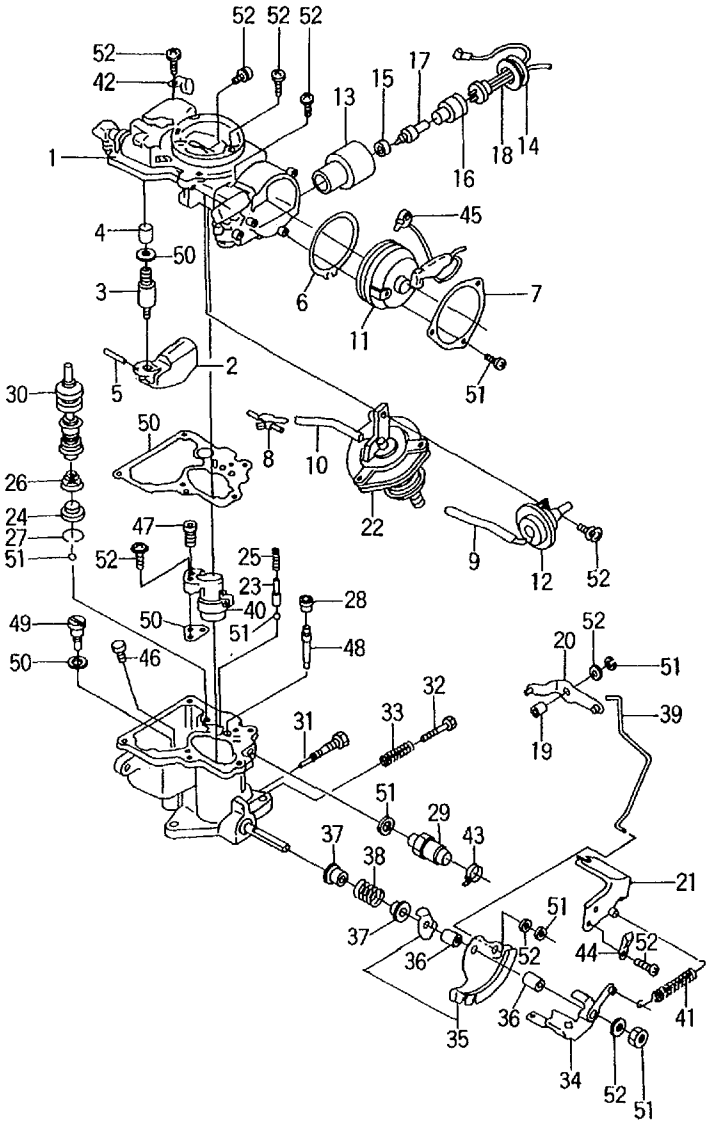

A :H15KA4GR00 D :H20KA4GR01 G :H20KA4GR04 K :H25KA4GR00 N :H25KA4GR03
B :H15KA4GR03 E :H20KA4GR02 H :H20KA4GR05 L :H25KA4GR01 P :H25KA4GR60
C :H20KA4GR00 F :H20KA4GR03 J :H20KA4GR06 M :H25KA4GR02 Q :H25KA4GR61

No.	Part No.	Description	Req'd	Remarks • Serial No.
27	N-16156-11200	* CLIP	1	A,B,C,D,E,F,J
28	N-16286-85G00	VALVE	1	A,B,C,D,E,F,J
29	N-16196-55K00	VALVE	1	A,B,C,D,E,F,J
30	N-16151-D4000	* PISTON	1	A,B,C,D,E,F,J
31	N-16144-50K00	SCREW	1	A,B,C,D,E,F,J
32	N-16144-55K00	SCREW	1	A,B,C,D,E,F,J
33	N-16145-B8500	SPRING	1	A,B,C,D,E,F,J
34	N-16249-55K00	LEVER	1	A,B,C,D,E,F,J
35	N-16134-60K00	LEVER	1	A,B,C,D,E,F,J
36	N-16217-60K00	COLLAR	1	A,B,C,D,E,F,J
37	N-16116-60K00	SLEEVE	2	A,B,C,D,E,F,J
38	N-16160-55K00	SPRING	2	A,B,C,D,E,F,J
39	N-16143-55K00	ROD	1	A,B,C,D,E,F,J
40	N-16013-55K00	VENTURI	1	A,B,C,D,E,F,J
41	N-16160-85G60	SPRING	1	A,B,C,D,E,F,J
42	N-16187-50K00	HOLDER	1	A,B,C,D,E,F,J
43	N-16138-55K00	CLAMP	1	A,B,C,D,E,F,J
44	N-16156-55K00	CLAMP	1	A,B,C,D,E,F,J
45	NO PART NO.	CLAMP	1	A,B,C,D,E,F,J
46	N-16033-A4500	JET,MAIN	1	A,B
-	N-16033-T8000	JET,MAIN	1	C,D,E,F,J
47	N-16036-55K00	BLEED	1	A,B
-	N-16036-50K00	BLEED	1	C,D,E,F,J
48	N-16054-26T00	* JET,SLOW	1	A,B
-	N-16054-20J00	* JET,SLOW	1	C,D,E,F,J
49	N-16059-D1402	* JET,POWER	1	A,B
-	N-16059-D0100	* JET,POWER	1	C,D,E,F,J
50	N-16455-60K00	* GASKET	1	A,B,C,D,E,F,J
51	N-16465-60K00	* SCREW	1	A,B,C,D,E,F,J
52	N-16475-55K00	* SCREW	1	A,B,C,D,E,F,J

H-6 CARBURETOR(INNER PARTS)

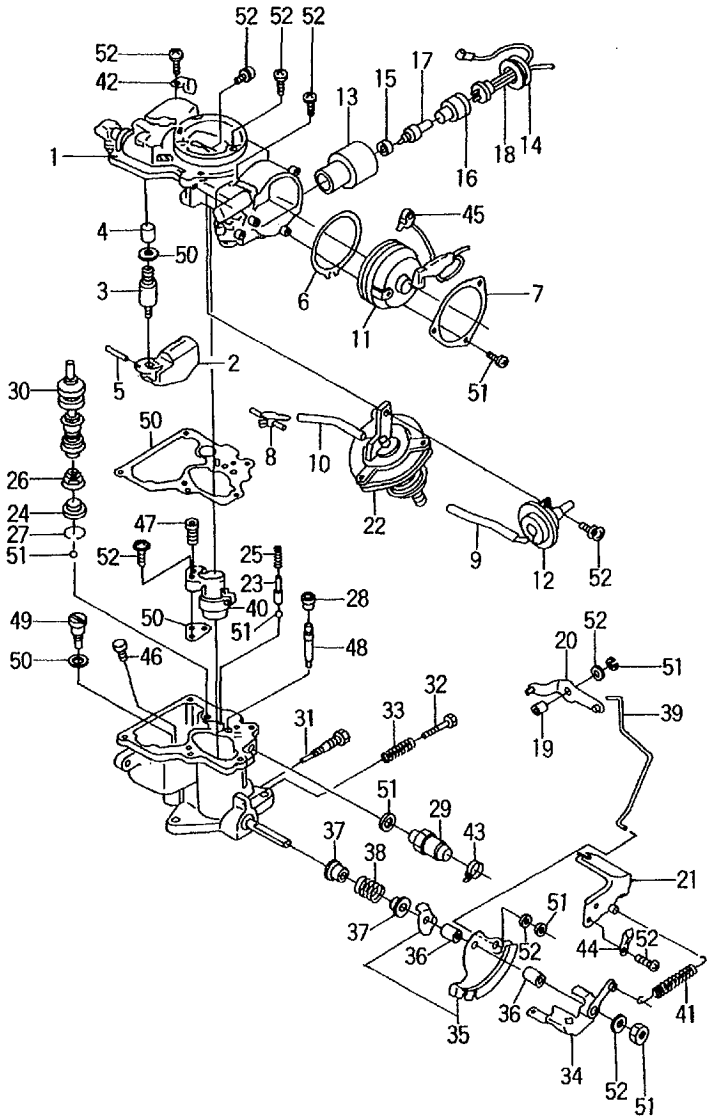

A :H15KA4GR00 D :H20KA4GR01 G :H20KA4GR04 K :H25KA4GR00 N :H25KA4GR03
B :H15KA4GR03 E :H20KA4GR02 H :H20KA4GR05 L :H25KA4GR01 P :H25KA4GR60
C :H20KA4GR00 F :H20KA4GR03 J :H20KA4GR06 M :H25KA4GR02 Q :H25KA4GR61

No.	Part No.	Description	Req'd	Remarks・Serial No.
A	N-16010-60K01	CARBURETOR	1	K,L,M,N,P,Q
				INC.1-52
1	N-16266-60K00	CHAMBER,CHOKE	1	K,L,M,N,P,Q
				INC.2-20,22
2	N-16061-55K00	FLOAT	1	K,L,M,N,P,Q
K	N-20801-0C111	* KIT,REPAIR	1	K,L,M,N,P,Q
				INC.3,4,24,25,27,30,48-52
3	N-16101-53L02	* VALVE	1	K,L,M,N,P,Q
				INC.4
4	N-16098-D0100	* FILTER	1	K,L,M,N,P,Q
5	N-16827-85G00	PIN	1	K,L,M,N,P,Q
6	N-16390-50Y00	PLATE	1	K,L,M,N,P,Q
7	N-16390-01M01	PLATE	1	K,L,M,N,P,Q
8	N-16267-55K00	CONNECTOR	1	K,L,M,N,P,Q
9	N-16520-50K00	PIPE	1	K,L,M,N,P,Q
10	N-16520-67G00	PIPE	1	K,L,M,N,P,Q
11	N-16389-55K00	COVER	1	K,L,M,N,P,Q
12	N-16199-55K00	PISTON	1	K,L,M,N,P,Q
13	N-16391-55K00	ELEMENT	1	K,L,M,N,P,Q
				INC.14-18
14	NO PART NO.	NUT	1	K,L,M,N,P,Q
15	N-16392-W7000	STOPPER	2	K,L,M,N,P,Q
16	N-16394-W7001	PTC	2	K,L,M,N,P,Q
17	N-16393-50Y00	WAX	2	K,L,M,N,P,Q
18	N-16396-55K00	WIRE-HARNESS	1	K,L,M,N,P,Q
19	N-16217-50K00	COLLAR	1	K,L,M,N,P,Q
20	N-16302-55K00	LEVER	1	K,L,M,N,P,Q
21	N-16165-55K00	BRACKET	1	K,L,M,N,P,Q
22	N-16313-50K00	CHAMBER	1	K,L,M,N,P,Q
23	N-16071-01M00	WEIGHT	1	K,L,M,N,P,Q
24	N-16245-11200	* STRAINER	1	K,L,M,N,P,Q
25	N-16069-B8500	* SPRING	1	K,L,M,N,P,Q
26	N-16148-50Y00	SPRING	1	K,L,M,N,P,Q
27	N-16156-11200	* CLIP	1	K,L,M,N,P,Q
28	N-16286-85G00	VALVE	1	K,L,M,N,P,Q
29	N-16196-55K00	VALVE	1	K,L,M,N,P,Q
30	N-16151-D4000	* PISTON	1	K,L,M,N,P,Q
31	N-16144-50K00	SCREW	1	K,L,M,N,P,Q
32	N-16144-55K00	SCREW	1	K,L,M,N,P,Q
33	N-16145-B8500	SPRING	1	K,L,M,N,P,Q

H-7 CARBURETOR(INNER PARTS)

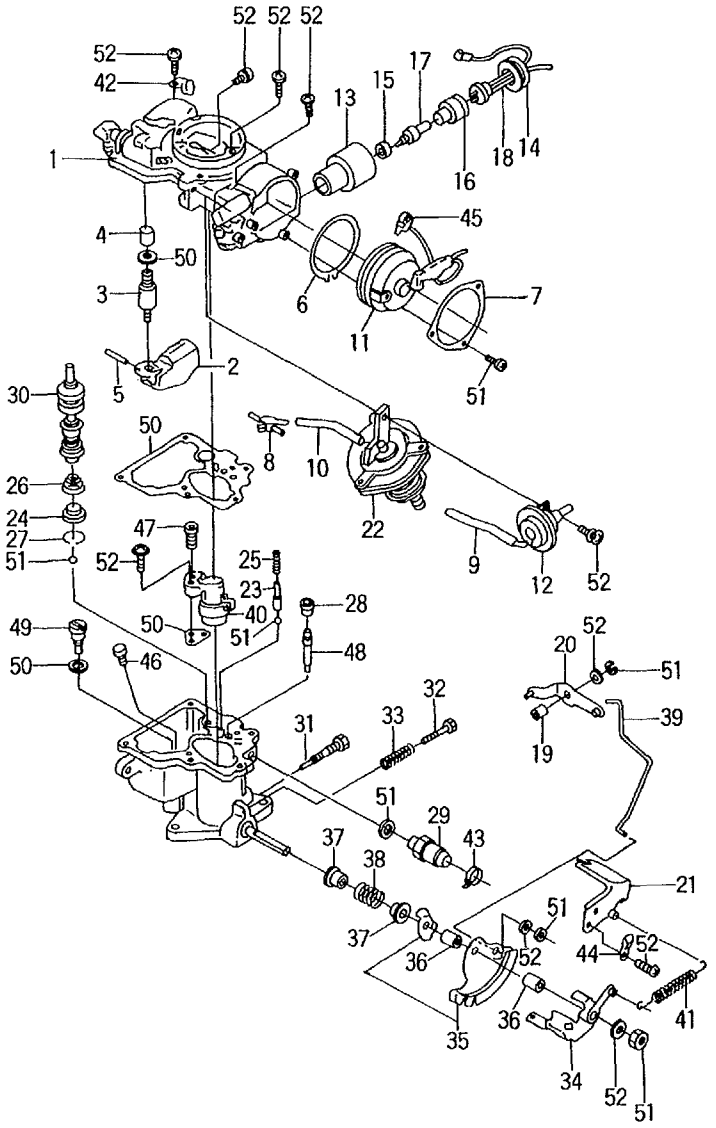

A :H15KA4GR00 D :H20KA4GR01 G :H20KA4GR04 K :H25KA4GR00 N :H25KA4GR03
B :H15KA4GR03 E :H20KA4GR02 H :H20KA4GR05 L :H25KA4GR01 P :H25KA4GR60
C :H20KA4GR00 F :H20KA4GR03 J :H20KA4GR06 M :H25KA4GR02 Q :H25KA4GR61

No.	Part No.	Description	Req'd	Remarks • Serial No.
34	N-16249-55K00	LEVER	1	K,L,M,N,P,Q
35	N-16134-60K00	LEVER	1	K,L,M,N,P,Q
36	N-16217-60K00	COLLAR	1	K,L,M,N,P,Q
37	N-16116-60K00	SLEEVE	2	K,L,M,N,P,Q
38	N-16160-55K00	SPRING	2	K,L,M,N,P,Q
39	N-16143-55K00	ROD	1	K,L,M,N,P,Q
40	N-16013-55K00	VENTURI	1	K,L,M,N,P,Q
41	N-16160-85G60	SPRING	1	K,L,M,N,P,Q
42	N-16187-50K00	HOLDER	1	K,L,M,N,P,Q
43	N-16138-55K00	CLAMP	1	K,L,M,N,P,Q
44	N-16156-55K00	CLAMP	1	K,L,M,N,P,Q
45	NO PART NO.	CLAMP	1	K,L,M,N,P,Q
46	N-16033-20J00	JET,MAIN	1	K,L,M,N,P,Q
47	N-16036-50K00	BLEED	1	K,L,M,N,P,Q
48	N-16054-60K00	* JET,SLOW	1	K,L,M,N,P,Q
49	N-16059-60K00	* JET,POWER	1	K,L,M,N,P,Q
50	N-16455-60K00	* GASKET	1	K,L,M,N,P,Q
51	N-16465-60K00	* SCREW	1	K,L,M,N,P,Q
52	N-16475-55K00	* SCREW	1	K,L,M,N,P,Q

H-8 FUEL PUMP & COVER

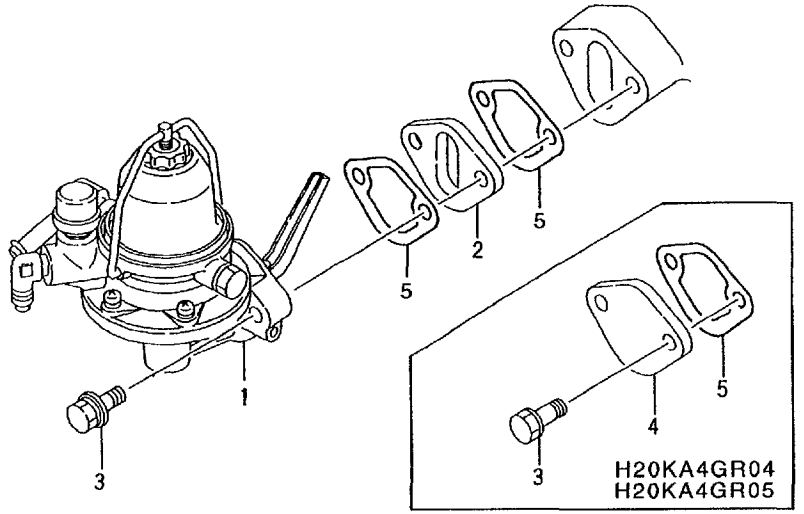

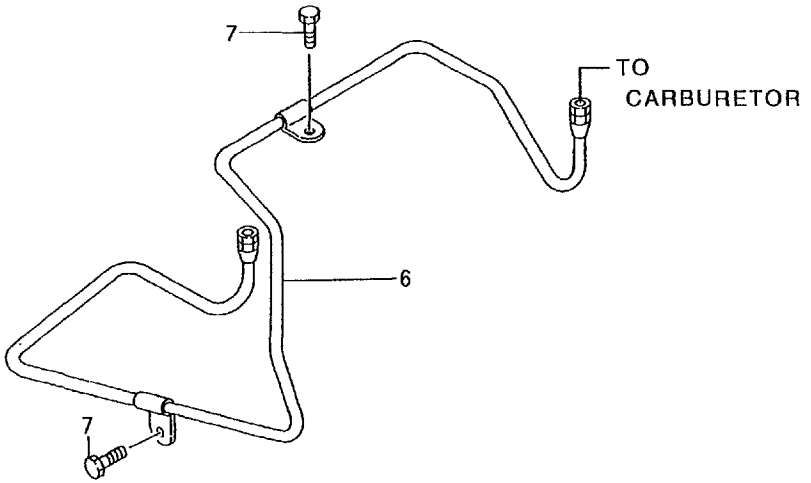

A :H15KA4GR00 D :H20KA4GR01 G :H20KA4GR04 K :H25KA4GR00 N :H25KA4GR03
B :H15KA4GR03 E :H20KA4GR02 H :H20KA4GR05 L :H25KA4GR01 P :H25KA4GR60
C :H20KA4GR00 F :H20KA4GR03 J :H20KA4GR06 M :H25KA4GR02 Q :H25KA4GR61

No.	Part No.	Description	Req'd	Remarks • Serial No.
1	N-17010-50K00	PUMP,FUEL	1	A,B,C,D,E,F,J SEE LOC.H-10
K	N-10101-50K25	KIT,GASKET	1	A,B,C,D,E,F,J ENGINE REPAIR INC.2,5 & etc.
2	N-16420-85G00	* SPACER	1	A,B,C,D,E,F,J INC.5
3	N-08120-8351E	BOLT	2	A,B,C,D,E,F,G,H,J
4	N-16420-E0100	COVER	1	G,H
5	N-17099-85G00	* PACKING	2	A,B,C,D,E,F,J
6	N-17522-50K00	PIPE	1	A,B,C,D,E,F,J
7	N-08120-8161F	BOLT	2	A,B,C,D,E,F,J
8	N-16420-21001	GASKET	2	G,H

H-9 FUEL PUMP & COVER

A :H15KA4GR00	D :H20KA4GR01	G :H20KA4GR04	K :H25KA4GR00	N :H25KA4GR03
B :H15KA4GR03	E :H20KA4GR02	H :H20KA4GR05	L :H25KA4GR01	P :H25KA4GR60
C :H20KA4GR00	F :H20KA4GR03	J :H20KA4GR06	M :H25KA4GR02	Q :H25KA4GR61

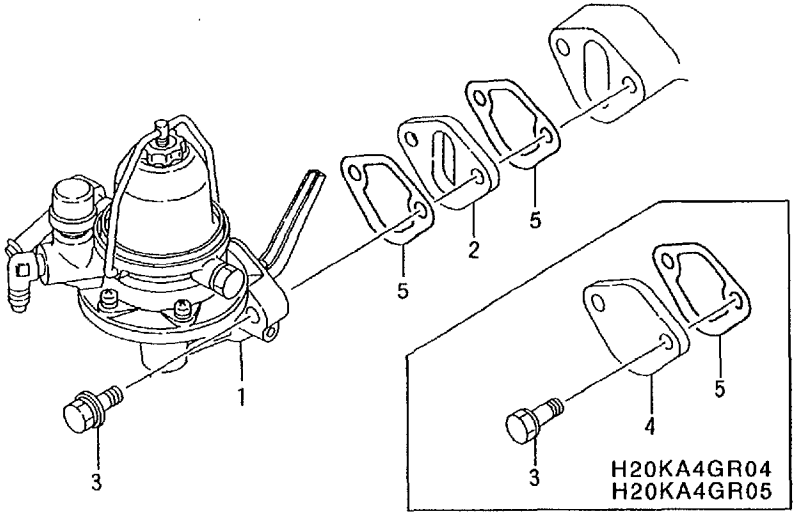

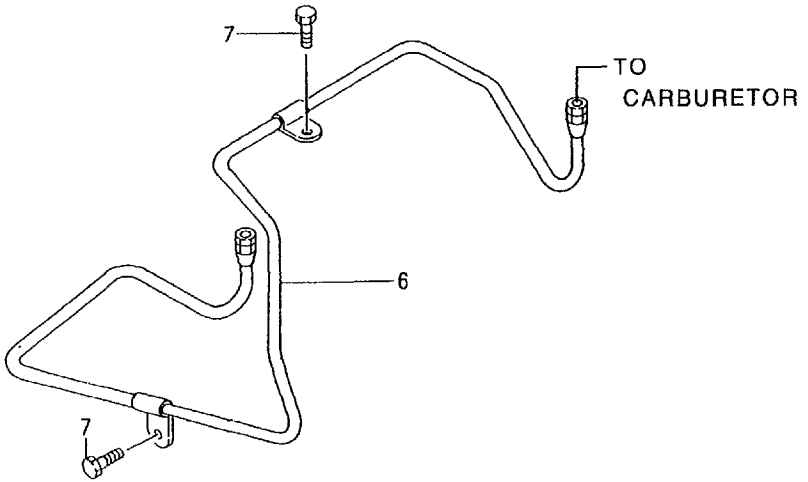

No.	Part No.	Description	Req'd	Remarks • Serial No.
1	N-17010-50K00	PUMP,FUEL	1	K,L,M,N,P,Q SEE LOC.H-11
K	N-10101-50K25	KIT,GASKET	1	K,L,M,N,P,Q ENGINE REPAIR INC.2,5 & etc.
2	N-16420-85G00	* SPACER	1	K,L,M,N,P,Q INC.5
3	N-08120-8351E	BOLT	2	K,L,M,N,P,Q
5	N-17099-85G00	* PACKING	2	K,L,M,N,P,Q
6	N-17522-50K00	PIPE	1	K,L,M,N,P,Q
7	N-08120-8161F	BOLT	2	K,L,M,N,P,Q

H-10 FUEL PUMP(INNER PARTS)

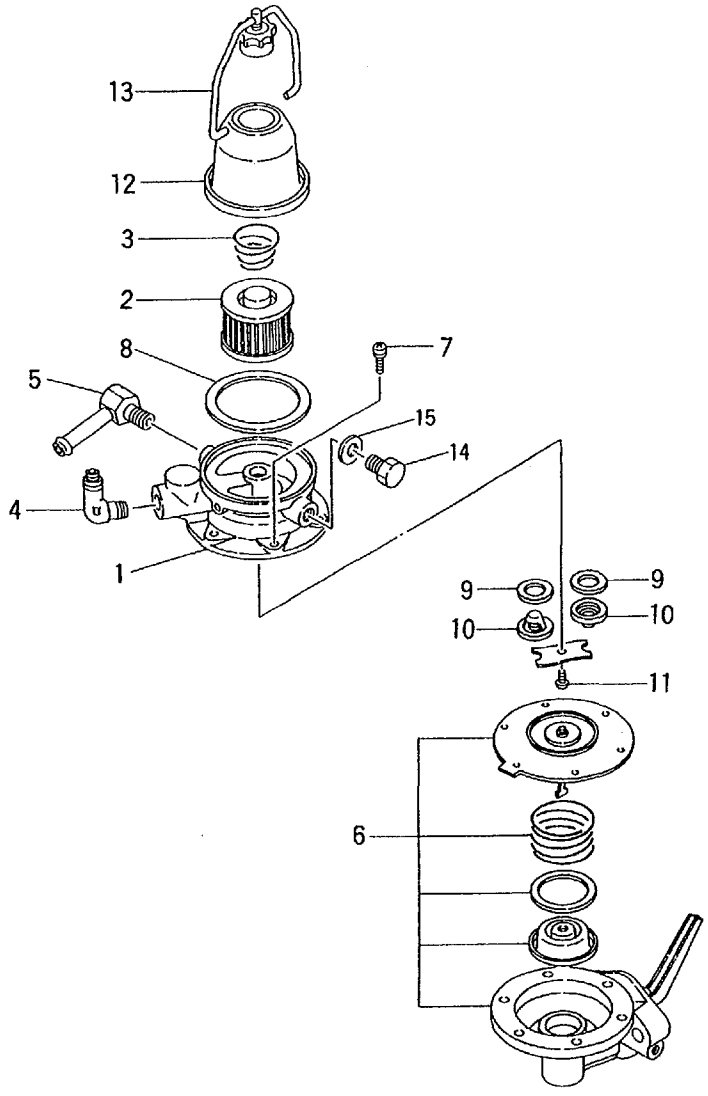

A :H15KA4GR00 D :H20KA4GR01 G :H20KA4GR04 K :H25KA4GR00 N :H25KA4GR03
B :H15KA4GR03 E :H20KA4GR02 H :H20KA4GR05 L :H25KA4GR01 P :H25KA4GR60
C :H20KA4GR00 F :H20KA4GR03 J :H20KA4GR06 M :H25KA4GR02 Q :H25KA4GR61

No.	Part No.	Description	Req'd	Remarks • Serial No.
1	N-17010-50K00	PUMP,FUEL	1	A,B,C,D,E,F,J
				INC.2-13
2	N-16404-78213	ELEMENT,FUEL	1	A,B,C,D,E,F,J
3	N-16405-10400	SPRING	1	A,B,C,D,E,F,J
4	N-17103-K5001	CONNECTOR	1	A,B,C,D,E,F,J
5	N-17103-05H01	CONNECTOR	1	A,B,C,D,E,F,J
6	N-17013-J0105	BODY	1	A,B,C,D,E,F,J
7	N-17089-M0100	SCREW	6	A,B,C,D,E,F,J
8	N-16407-00H01	GASKET	1	A,B,C,D,E,F,J
9	N-17061-50000	GASKET	2	A,B,C,D,E,F,J
10	N-17065-13210	VALVE	2	A,B,C,D,E,F,J
11	N-17075-M0100	SCREW	1	A,B,C,D,E,F,J
12	N-16402-48200	BOWL	1	A,B,C,D,E,F,J
13	N-16440-35210	BAND	1	A,B,C,D,E,F,J
14	NO PART NO.	PLUG	1	A,B,C,D,E,F,J
15	NO PART NO.	PACKING	1	A,B,C,D,E,F,J

H-11 FUEL PUMP(INNER PARTS)

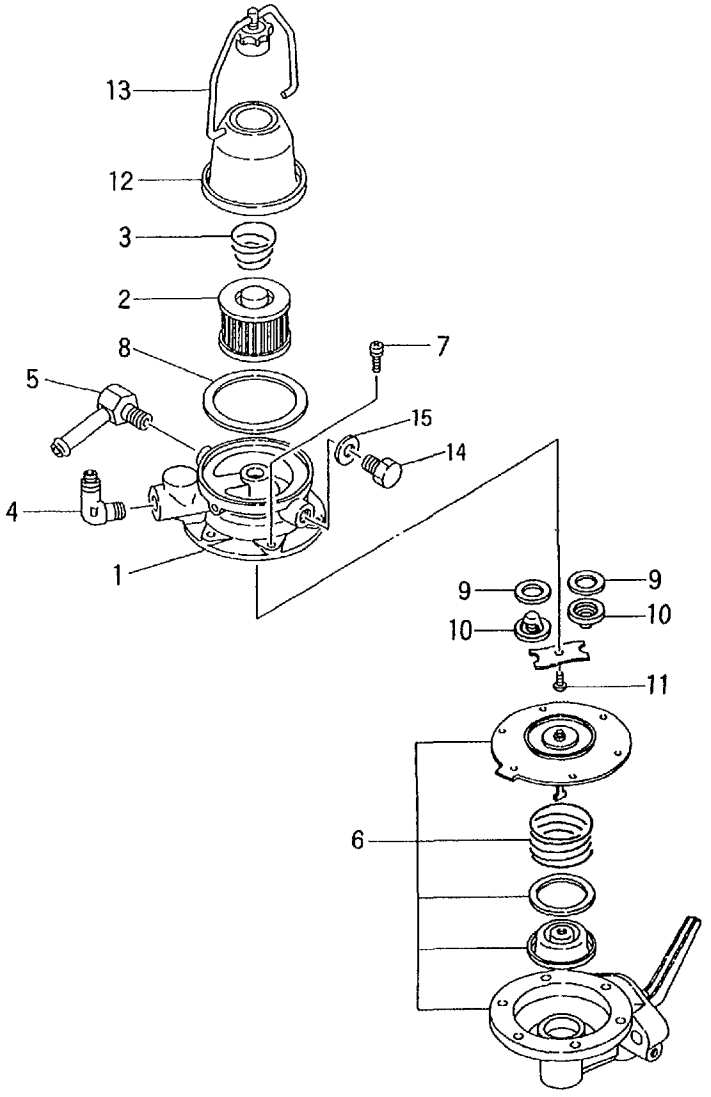

A :H15KA4GR00 D :H20KA4GR01 G :H20KA4GR04 K :H25KA4GR00 N :H25KA4GR03
B :H15KA4GR03 E :H20KA4GR02 H :H20KA4GR05 L :H25KA4GR01 P :H25KA4GR60
C :H20KA4GR00 F :H20KA4GR03 J :H20KA4GR06 M :H25KA4GR02 Q :H25KA4GR61

No.	Part No.	Description	Req'd	Remarks • Serial No.
1	N-17010-50K00	PUMP,FUEL	1	K,L,M,N,P,Q
				INC.2-13
2	N-16404-78213	ELEMENT,FUEL	1	K,L,M,N,P,Q
3	N-16405-10400	SPRING	1	K,L,M,N,P,Q
4	N-17103-K5001	CONNECTOR	1	K,L,M,N,P,Q
5	N-17103-05H01	CONNECTOR	1	K,L,M,N,P,Q
6	N-17013-J0105	BODY	1	K,L,M,N,P,Q
7	N-17089-M0100	SCREW	6	K,L,M,N,P,Q
8	N-16407-00H01	GASKET	1	K,L,M,N,P,Q
9	N-17061-50000	GASKET	2	K,L,M,N,P,Q
10	N-17065-13210	VALVE	2	K,L,M,N,P,Q
11	N-17075-M0100	SCREW	1	K,L,M,N,P,Q
12	N-16402-48200	BOWL	1	K,L,M,N,P,Q
13	N-16440-35210	BAND	1	K,L,M,N,P,Q
14	NO PART NO.	PLUG	1	K,L,M,N,P,Q
15	NO PART NO.	PACKING	1	K,L,M,N,P,Q

H-12 GOVERNOR

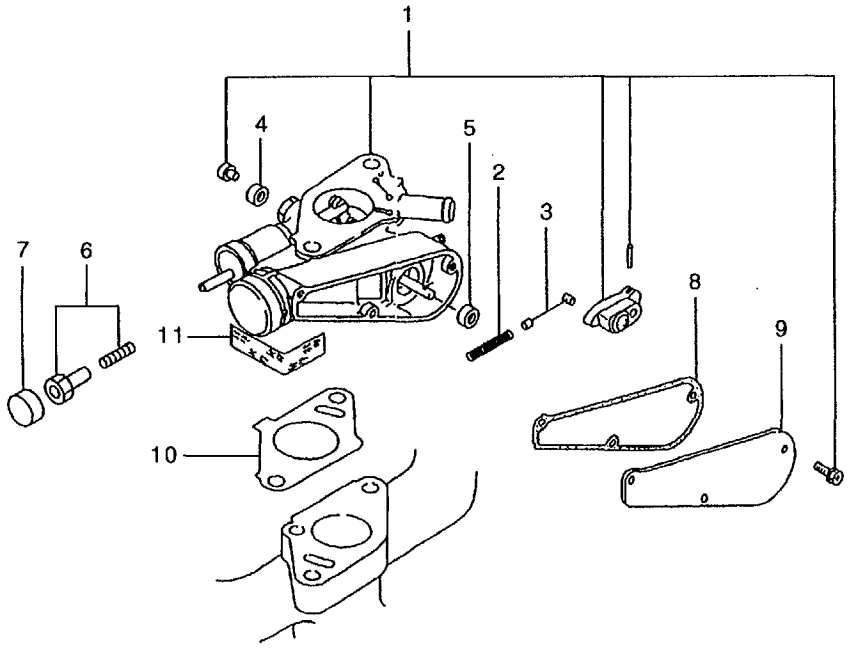

A :H15KA4GR00 D :H20KA4GR01 G :H20KA4GR04 K :H25KA4GR00 N :H25KA4GR03
B :H15KA4GR03 E :H20KA4GR02 H :H20KA4GR05 L :H25KA4GR01 P :H25KA4GR60
C :H20KA4GR00 F :H20KA4GR03 J :H20KA4GR06 M :H25KA4GR02 Q :H25KA4GR61

No.	Part No.	Description	Req'd	Remarks · Serial No.
1	N-19100-K9501	GOVERNOR	1	A,B INC.2-9
-	N-19100-61K66	GOVERNOR	1	C,D,E,F,G,H,J INC.2-9
2	N-19110-50K10	KIT,WIRE	1	A,B,C,D,E,F,G,H,J INC.3
3	N-19110-50K00	* BAND WIRE	1	A,B,C,D,E,F,G,H,J
4	N-19217-00H00	BRG	1	A,B,C,D,E,F,G,H,J
5	N-19217-00H20	BRG	1	A,B,C,D,E,F,G,H,J
6	N-19244-50K00	SCREW	1	A,B,C,D,E,F,G,H,J
7	N-19206-50K01	CAP	1	A,B,C,D,E,F,G,H,J
8	N-19253-50K02	GASKET	1	A,B,C,D,E,F,G,H,J
9	N-19240-50K00	COVER	1	A,B,C,D,E,F,G,H,J
10	N-16174-50K00	GASKET	1	A,B,C,D,E,F,G,H,J
11	N-22235-U7400	SEAL	1	A,B,C,D,E,F,G,H,J

H-13 GOVERNOR

A :H15KA4GR00 D :H20KA4GR01 G :H20KA4GR04 K :H25KA4GR00 N :H25KA4GR03
B :H15KA4GR03 E :H20KA4GR02 H :H20KA4GR05 L :H25KA4GR01 P :H25KA4GR60
C :H20KA4GR00 F :H20KA4GR03 J :H20KA4GR06 M :H25KA4GR02 Q :H25KA4GR61

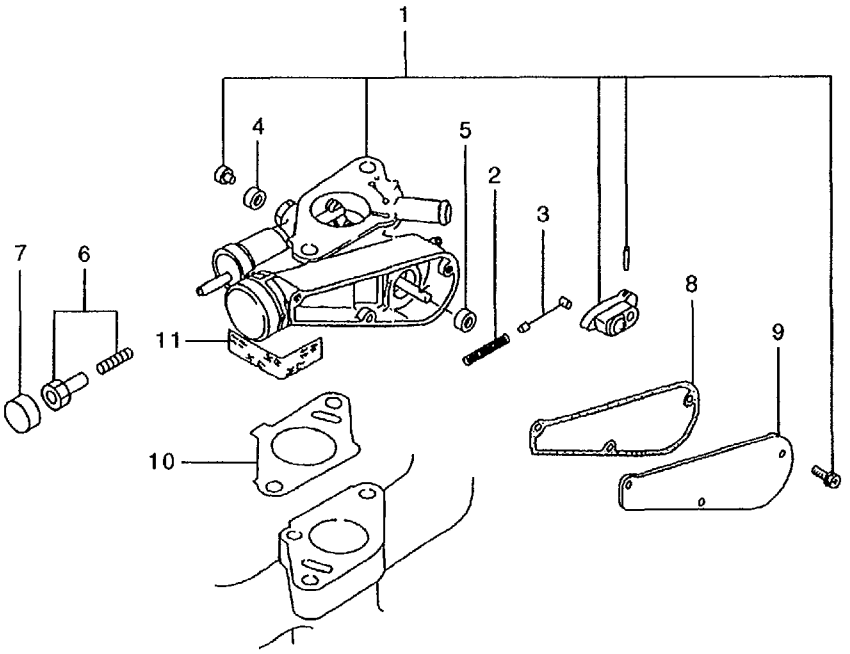

No.	Part No.	Description	Req'd	Remarks • Serial No.
1	N-19100-K9702	GOVERNOR	1	K,L,M,N INC.2-9
-	N-19100-K9703	GOVERNOR	1	P,Q INC.2-9
2	N-19110-60K10	KIT,WIRE	1	K,L,M,N,P,Q INC.3
3	N-19110-50K00	* BAND WIRE	1	K,L,M,N,P,Q
4	N-19217-00H00	BRG	1	K,L,M,N,P,Q
5	N-19217-00H20	BRG	1	K,L,M,N,P,Q
6	N-19244-50K00	SCREW	1	K,L,M,N,P,Q
7	N-19206-50K01	CAP	1	K,L,M,N,P,Q
8	N-19253-50K02	GASKET	1	K,L,M,N,P,Q
9	N-19240-50K00	COVER	1	K,L,M,N,P,Q
10	N-16174-50K00	GASKET	1	K,L,M,N,P,Q
11	N-22235-U7400	SEAL	1	K,L,M,N,P,Q

I-2 IGNITION SYSTEM

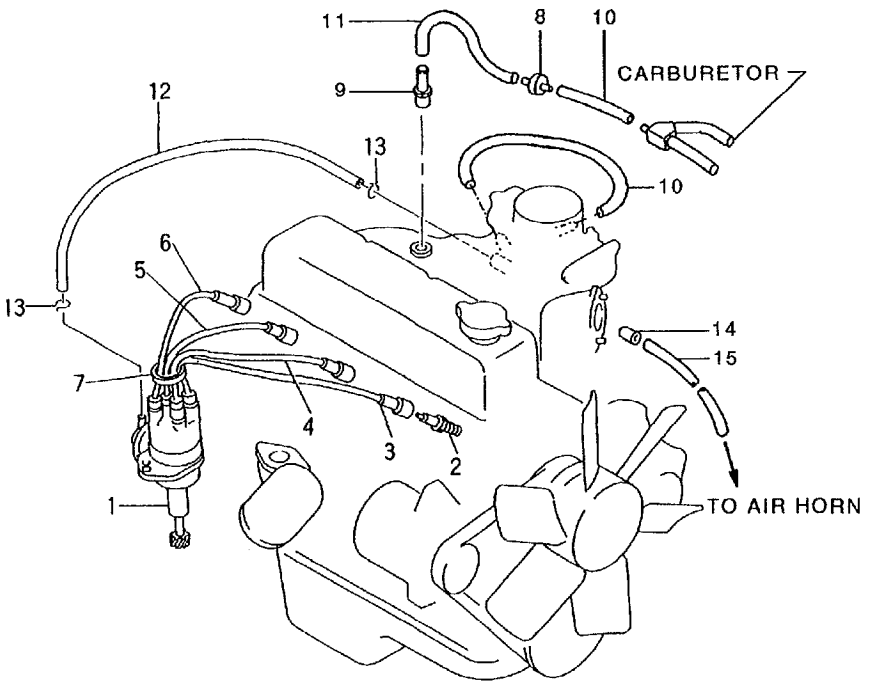

A :H15KA4GR00 D :H20KA4GR01 G :H20KA4GR04 K :H25KA4GR00 N :H25KA4GR03
B :H15KA4GR03 E :H20KA4GR02 H :H20KA4GR05 L :H25KA4GR01 P :H25KA4GR60
C :H20KA4GR00 F :H20KA4GR03 J :H20KA4GR06 M :H25KA4GR02 Q :H25KA4GR61

No.	Part No.	Description	Req'd	Remarks · Serial No.
1	N-22100-50K10	DISTRIBUTOR	1	A,B,C,D,E,F,G,H,J SEE LOC.I-4 -1997.12
-	N-22100-50K15	DISTRIBUTOR	1	A,B,C,D,E,F,G,H,J SEE LOC.I-4 1998.1-
2	N-22401-W8914	PLUG,SPARK	4	A,B,C,D,E,F,G,H,J
A1	N-22450-50K50	CABLE-ASSY	1	A,B,C,D,E,F,G,H,J INC.3-7
3	N-22451-66001	CABLE,NO.1	1	A,B,C,D,E,F,G,H,J
4	N-22452-66001	CABLE,NO.2	1	A,B,C,D,E,F,G,H,J
5	N-22453-66001	CABLE	1	A,B,C,D,E,F,G,H,J No.3
6	N-22454-80001	CABLE,NO.4	1	A,B,C,D,E,F,G,H,J
7	N-22431-10560	RING	1	A,B,C,D,E,F,G,H,J
8	N-14958-H9810	VALVE	1	A,B,C,D,E,F,G,H,J
9	N-14875-A2600	CONNECTOR	1	A,B,C,D,E,F,G,H,J
10	NO PART NO.	HOSE	2	A,B,C,D,E,F,G,H,J L=130
11	NO PART NO.	HOSE	1	A,B,C,D,E,F,G,H,J L=160
12	NO PART NO.	HOSE	1	A,B,C,D,E,F,G,H,J L=640
13	N-01552-00321	CLAMP	2	A,B,C,D,E,F,G,H,J
A2	N-22318-K9300	HOSE	1	A,B,C,D,E,F,G,H,J INC.14,15
14	N-16335-34A00	ORIFICE	1	A,B,C,D,E,F,G,H,J
15	N-02173-02720	HOSE	1	A,B,C,D,E,F,G,H,J

I-3 IGNITION SYSTEM

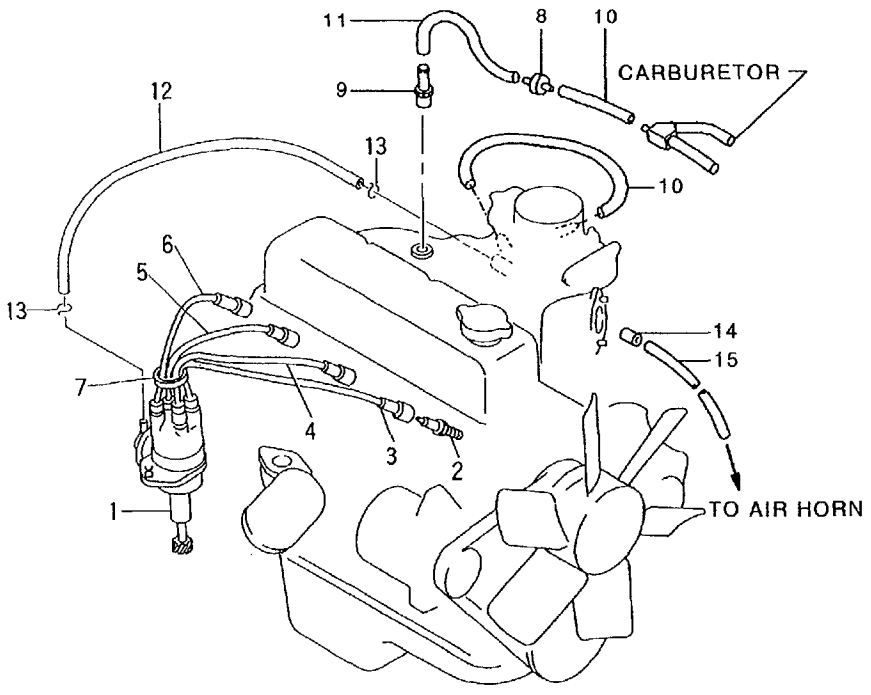

A :H15KA4GR00 D :H20KA4GR01 G :H20KA4GR04 K :H25KA4GR00 N :H25KA4GR03
B :H15KA4GR03 E :H20KA4GR02 H :H20KA4GR05 L :H25KA4GR01 P :H25KA4GR60
C :H20KA4GR00 F :H20KA4GR03 J :H20KA4GR06 M :H25KA4GR02 Q :H25KA4GR61

No.	Part No.	Description	Req'd	Remarks · Serial No.
1	N-22100-60K11	DISTRIBUTOR	1	K,L,M,N,P,Q SEE LOC.I-5 -1997.12
-	N-22100-60K15	DISTRIBUTOR	1	K,L,M,N,P,Q SEE LOC.I-5 1998.1-
2	N-22401-W8914	PLUG,SPARK	4	K,L,M,N,P,Q
A1	N-22450-50K50	CABLE-ASSY	1	K,L,M,N,P,Q INC.3-7
3	N-22451-66001	CABLE,NO.1	1	K,L,M,N,P,Q
4	N-22452-66001	CABLE,NO.2	1	K,L,M,N,P,Q
5	N-22453-66001	CABLE	1	K,L,M,N,P,Q No.3
6	N-22454-80001	CABLE,NO.4	1	K,L,M,N,P,Q
7	N-22431-10560	RING	1	K,L,M,N,P,Q
8	N-14958-H9810	VALVE	1	K,L,M,N,P,Q
9	N-14875-A2600	CONNECTOR	1	K,L,M,N,P,Q
10	NO PART NO.	HOSE	2	K,L,M,N,P,Q L=130
11	NO PART NO.	HOSE	1	K,L,M,N,P,Q L=160
12	NO PART NO.	HOSE	1	K,L,M,N,P,Q L=600
13	N-01552-00321	CLAMP	2	K,L,M,N,P,Q
A2	N-22318-K9300	HOSE	1	K,L,M,N,P,Q INC.14,15
14	N-16335-34A00	ORIFICE	1	K,L,M,N,P,Q
15	N-02173-02720	HOSE	1	K,L,M,N,P,Q

I-4 DISTRIBUTOR(INNER PARTS)

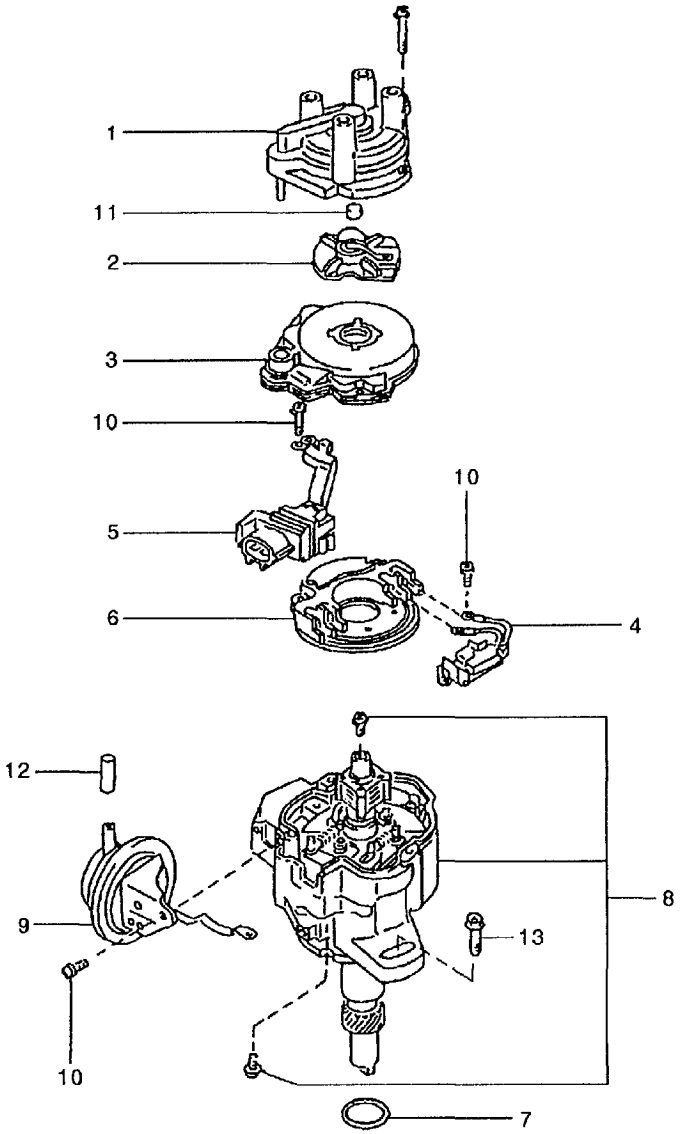

A :H15KA4GR00 D :H20KA4GR01 G :H20KA4GR04 K :H25KA4GR00 N :H25KA4GR03
B :H15KA4GR03 E :H20KA4GR02 H :H20KA4GR05 L :H25KA4GR01 P :H25KA4GR60
C :H20KA4GR00 F :H20KA4GR03 J :H20KA4GR06 M :H25KA4GR02 Q :H25KA4GR61

No.	Part No.	Description	Req'd	Remarks • Serial No.
A1	N-22100-50K10	DISTRIBUTOR	1	A,B,C,D,E,F,G,H,J INC.1-11 -1997.12
-	N-22100-50K15	DISTRIBUTOR	1	A,B,C,D,E,F,G,H,J INC.1-11 1998.1-
1	N-22162-55K10	CAP	1	A,B,C,D,E,F,G,H,J INC.11
2	N-22157-55K10	ROTOR	1	A,B,C,D,E,F,G,H,J -1997.12
-	N-22157-55K15	ROTOR	1	A,B,C,D,E,F,G,H,J 1998.1-
3	N-22125-50Y11	COVER	1	A,B,C,D,E,F,G,H,J
4	N-22229-50Y10	KIT,PICK-UP	1	A,B,C,D,E,F,G,H,J
5	N-22404-55K10	CONNECTOR	1	A,B,C,D,E,F,G,H,J
6	N-22020-55K10	IGNITER	1	A,B,C,D,E,F,G,H,J
K	N-10101-50K25	KIT,GASKET	1	A,B,C,D,E,F,G,H,J ENGINE REPAIR INC.7 & etc.
7	N-22131-55K10	* O-RING	1	A,B,C,D,E,F,G,H,J
8	N-22106-50K10	HOUSING	1	A,B,C,D,E,F,G,H,J -1997.12
-	N-22106-50K15	HOUSING	1	A,B,C,D,E,F,G,H,J 1998.1-
9	N-22301-50K10	CONTROL	1	A,B,C,D,E,F,G,H,J
10	N-22750-M0110	SET,SCREW	1	A,B,C,D,E,F,G,H,J
11	N-22165-M5610	CARBON	1	A,B,C,D,E,F,G,H,J
12	N-16599-N3600	CAP	1	A,B,C,D,E,F,G,H,J
13	N-08360-8251D	BOLT	2	A,B,C,D,E,F,G,H,J

I-5 DISTRIBUTOR(INNER PARTS)

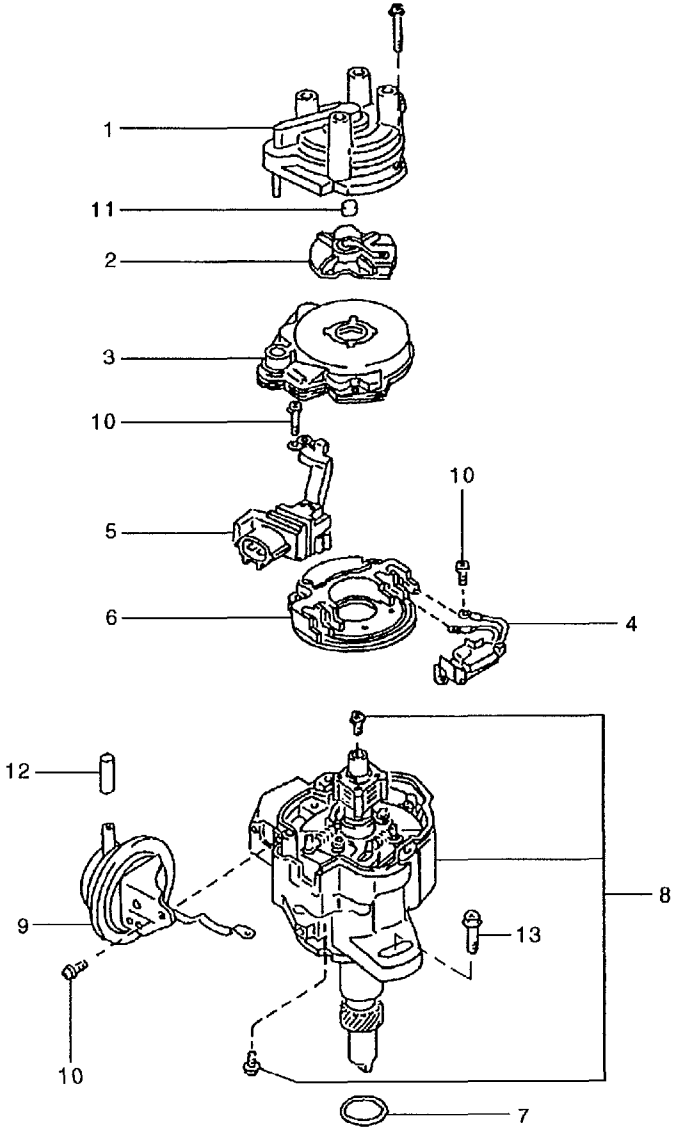

A :H15KA4GR00 D :H20KA4GR01 G :H20KA4GR04 K :H25KA4GR00 N :H25KA4GR03
B :H15KA4GR03 E :H20KA4GR02 H :H20KA4GR05 L :H25KA4GR01 P :H25KA4GR60
C :H20KA4GR00 F :H20KA4GR03 J :H20KA4GR06 M :H25KA4GR02 Q :H25KA4GR61

No.	Part No.	Description	Req'd	Remarks • Serial No.
A1	N-22100-60K11	DISTRIBUTOR	1	K,L,M,N,P,Q INC.1-11 -1997.12
-	N-22100-60K15	DISTRIBUTOR	1	K,L,M,N,P,Q INC.1-11 1998.1-
1	N-22162-55K10	CAP	1	K,L,M,N,P,Q INC.11
2	N-22157-55K10	ROTOR	1	K,L,M,N,P,Q -1997.12
-	N-22157-55K15	ROTOR	1	K,L,M,N,P,Q 1998.1-
3	N-22125-50Y11	COVER	1	K,L,M,N,P,Q
4	N-22229-50Y10	KIT,PICK-UP	1	K,L,M,N,P,Q
5	N-22404-55K10	CONNECTOR	1	K,L,M,N,P,Q
6	N-22020-55K10	IGNITER	1	K,L,M,N,P,Q
K	N-10101-50K25	KIT,GASKET	1	K,L,M,N,P,Q ENGINE REPAIR INC.7 & etc.
7	N-22131-55K10	* O-RING	1	K,L,M,N,P,Q
8	N-22106-60K11	HOUSING	1	K,L,M,N,P,Q -1997.12
-	N-22106-60K15	HOUSING	1	K,L,M,N,P,Q 1998.1-
9	N-22301-50K10	CONTROL	1	K,L,M,N,P,Q
10	N-22750-M0110	SET,SCREW	1	K,L,M,N,P,Q
11	N-22165-M5610	CARBON	1	K,L,M,N,P,Q
12	N-16599-N3600	CAP	1	K,L,M,N,P,Q
13	N-08360-8251D	BOLT	2	K,L,M,N,P,Q

I-6 ALTERNATOR(FITTING PARTS)

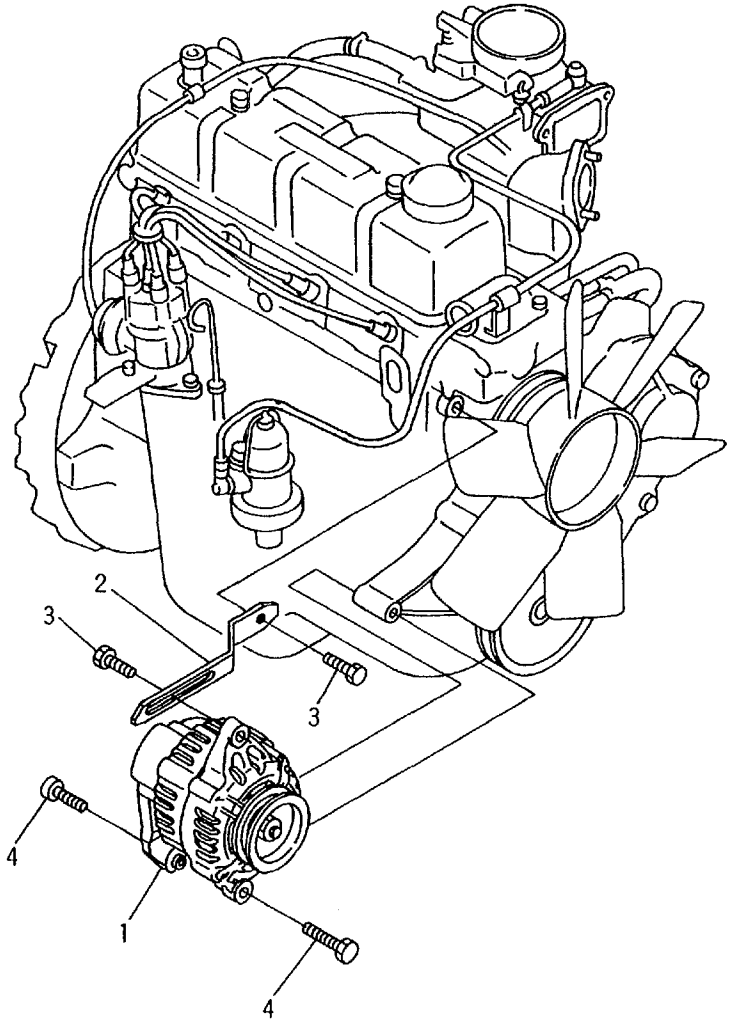

A :H15KA4GR00 D :H20KA4GR01 G :H20KA4GR04 K :H25KA4GR00 N :H25KA4GR03
B :H15KA4GR03 E :H20KA4GR02 H :H20KA4GR05 L :H25KA4GR01 P :H25KA4GR60
C :H20KA4GR00 F :H20KA4GR03 J :H20KA4GR06 M :H25KA4GR02 Q :H25KA4GR61

No.	Part No.	Description	Req'd	Remarks • Serial No.
1	N-23100-50K10	ALTERNATOR	1	A,B,C,D,F,G,H,J
				SEE LOC. I-8
-	N-23100-50K15	ALTERNATOR	1	E
				SEE LOC. I-8
2	N-11715-50K00	BAR	1	A,B,C,D,E,F,G,H,J
3	N-08120-8201F	BOLT	2	A,B,C,D,E,F,G,H,J
4	N-08120-8251F	BOLT	2	A,B,C,D,E,F,G,H,J

I-7 ALTERNATOR(FITTING PARTS)

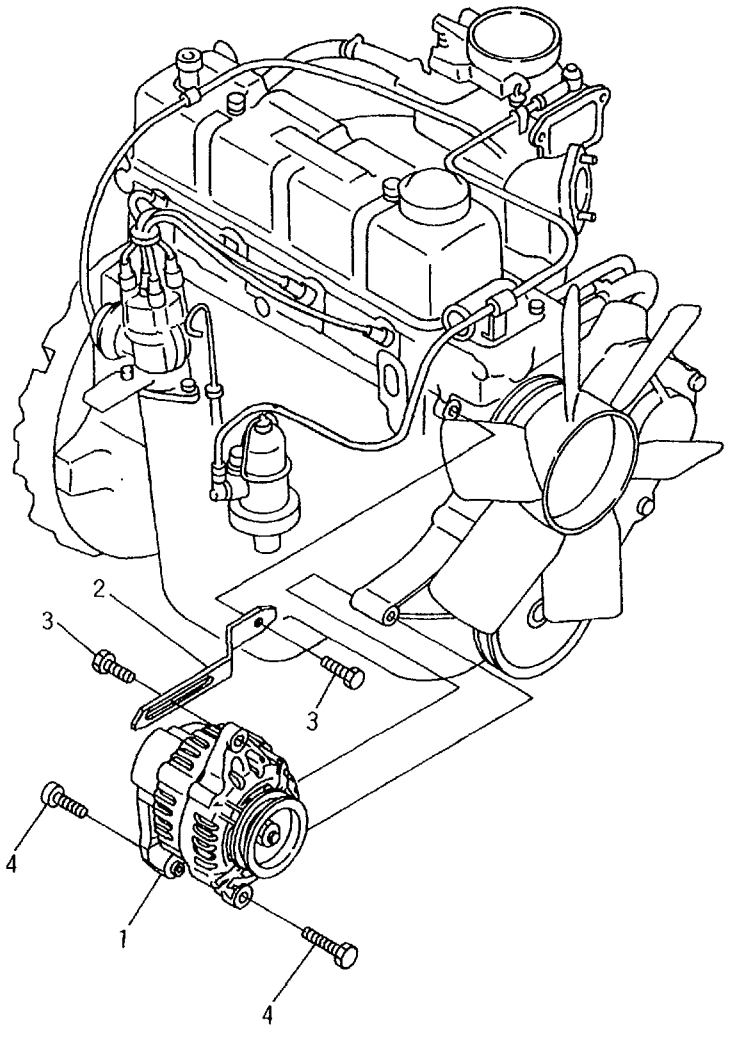

A :H15KA4GR00	D :H20KA4GR01	G :H20KA4GR04	K :H25KA4GR00	N :H25KA4GR03
B :H15KA4GR03	E :H20KA4GR02	H :H20KA4GR05	L :H25KA4GR01	P :H25KA4GR60
C :H20KA4GR00	F :H20KA4GR03	J :H20KA4GR06	M :H25KA4GR02	Q :H25KA4GR61

No.	Part No.	Description	Req'd	Remarks · Serial No.
1	N-23100-50K10	ALTERNATOR	1	K,L,N,P,Q SEE LOC.I-9
-	N-23100-50K15	ALTERNATOR	1	M SEE LOC.I-9
2	N-11715-50K00	BAR	1	K,L,M,N,P,Q
3	N-08120-8201F	BOLT	2	K,L,M,N,P,Q
4	N-08120-8251F	BOLT	2	K,L,M,N,P,Q

I-8 ALTERNATOR(INNER PARTS)

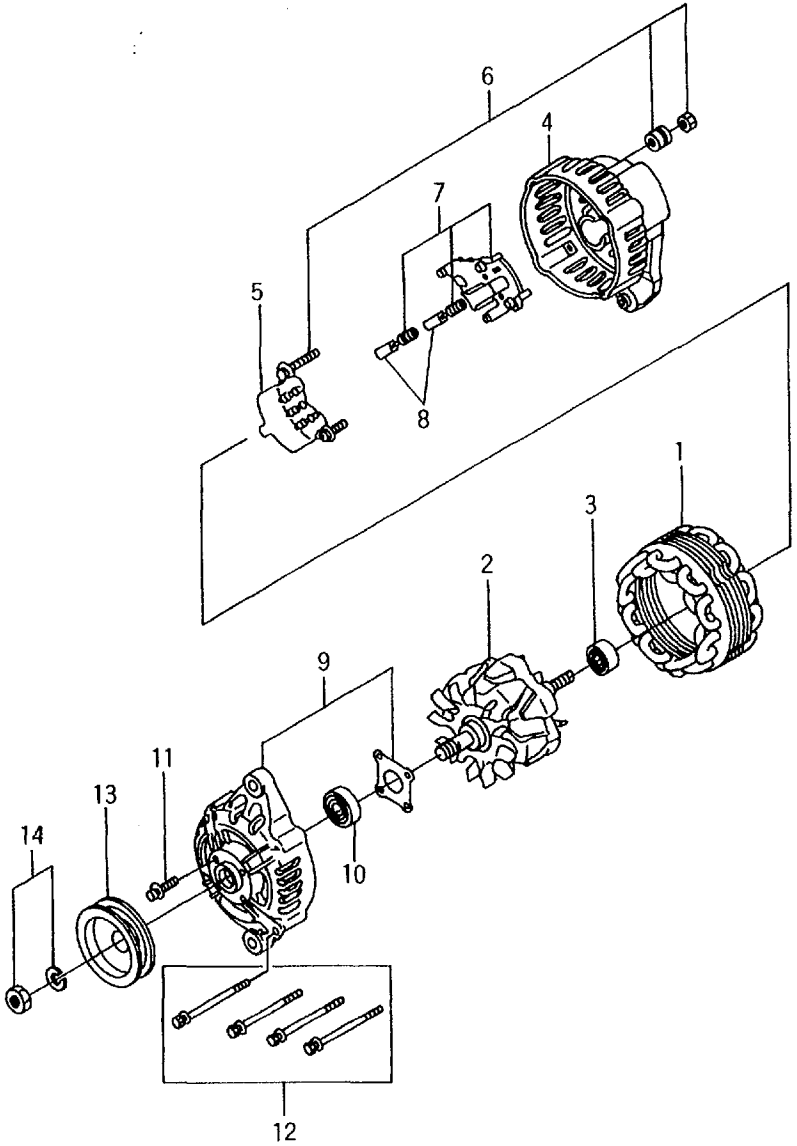

A :H15KA4GR00 D :H20KA4GR01 G :H20KA4GR04 K :H25KA4GR00 N :H25KA4GR03
B :H15KA4GR03 E :H20KA4GR02 H :H20KA4GR05 L :H25KA4GR01 P :H25KA4GR60
C :H20KA4GR00 F :H20KA4GR03 J :H20KA4GR06 M :H25KA4GR02 Q :H25KA4GR61

No.	Part No.	Description	Req'd	Remarks • Serial No.
A1	N-23100-50K10	ALTERNATOR	1	A,B,C,D,F,G,H,J INC.1-14
-	N-23100-50K15	ALTERNATOR	1	E INC.1-14
1	N-23102-47N10	STATOR	1	A,B,C,D,F,G,H,J
-	N-23102-50K15	STATOR	1	E
2	N-23108-47N10	ROTOR	1	A,B,C,D,F,G,H,J INC.3
-	N-23108-50K15	ROTOR	1	E INC.3
3	N-23120-30R10	BRG,BALL	1	A,B,C,D,E,F,G,H,J
4	N-23127-50K10	COVER	1	A,B,C,D,F,G,H,J INC.5-8
-	N-23127-50K16	COVER	1	E INC.5-8
5	N-23124-50K10	RECTIFIER	1	A,B,C,D,F,G,H,J
-	N-23124-50K16	RECTIFIER	1	E
6	N-23156-0B000	NUT SET	1	A,B,C,D,E,F,G,H,J
7	N-23215-50K10	REGULATOR	1	A,B,C,D,F,G,H,J INC.8
-	N-23215-50K11	REGULATOR	1	E INC.8
8	N-23142-0B000	BRUSH	2	A,B,C,D,E,F,G,H,J
9	N-23118-47N10	COVER	1	A,B,C,D,E,F,G,H,J INC.10,11
10	N-23120-22J20	BRG,BALL	1	A,B,C,D,E,F,G,H,J
11	N-23115-47N10	SET,SCREW	1	A,B,C,D,E,F,G,H,J
12	N-23131-20P10	SET,BOLT	1	A,B,C,D,E,F,G,H,J
13	N-23150-47N10	PULLEY	1	A,B,C,D,E,F,G,H,J
14	N-23153-70T12	NUT SET	1	A,B,C,D,E,F,G,H,J

I-9 ALTERNATOR(INNER PARTS)

A :H15KA4GR00 D :H20KA4GR01 G :H20KA4GR04 K :H25KA4GR00 N :H25KA4GR03
B :H15KA4GR03 E :H20KA4GR02 H :H20KA4GR05 L :H25KA4GR01 P :H25KA4GR60
C :H20KA4GR00 F :H20KA4GR03 J :H20KA4GR06 M :H25KA4GR02 Q :H25KA4GR61

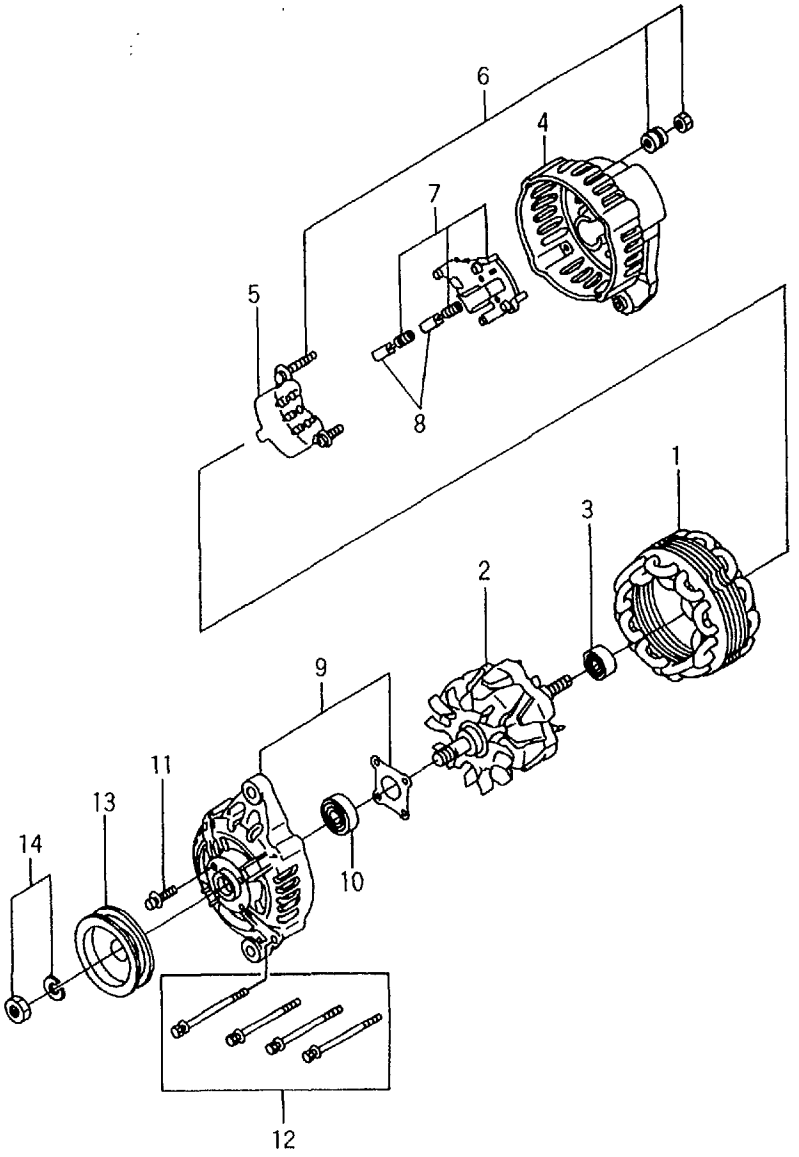

No.	Part No.	Description	Req'd	Remarks • Serial No.
A1	N-23100-50K10	ALTERNATOR	1	K,L,N,P,Q INC.1-14
-	N-23100-50K15	ALTERNATOR	1	M INC.1-14
1	N-23102-47N10	STATOR	1	K,L,N,P,Q
-	N-23102-50K15	STATOR	1	M
2	N-23108-47N10	ROTOR	1	K,L,N,P,Q INC.3
-	N-23108-50K15	ROTOR	1	M INC.3
3	N-23120-30R10	BRG,BALL	1	K,L,M,N,P,Q
4	N-23127-50K10	COVER	1	K,L,N,P,Q INC.5-8
-	N-23127-50K16	COVER	1	M INC.5-8
5	N-23124-50K10	RECTIFIER	1	K,L,N,P,Q
-	N-23124-50K16	RECTIFIER	1	M
6	N-23156-0B000	NUT SET	1	K,L,M,N,P,Q
7	N-23215-50K10	REGULATOR	1	K,L,N,P,Q INC.8
-	N-23215-50K11	REGULATOR	1	M INC.8
8	N-23142-0B000	BRUSH	2	K,L,M,N,P,Q
9	N-23118-47N10	COVER	1	K,L,M,N,P,Q INC.10,11
10	N-23120-22J20	BRG,BALL	1	K,L,M,N,P,Q
11	N-23115-47N10	SET,SCREW	1	K,L,M,N,P,Q
12	N-23131-20P10	SET,BOLT	1	K,L,M,N,P,Q
13	N-23150-47N10	PULLEY	1	K,L,M,N,P,Q
14	N-23153-70T12	NUT SET	1	K,L,M,N,P,Q

I-10 STARTER(FITTING PARTS)

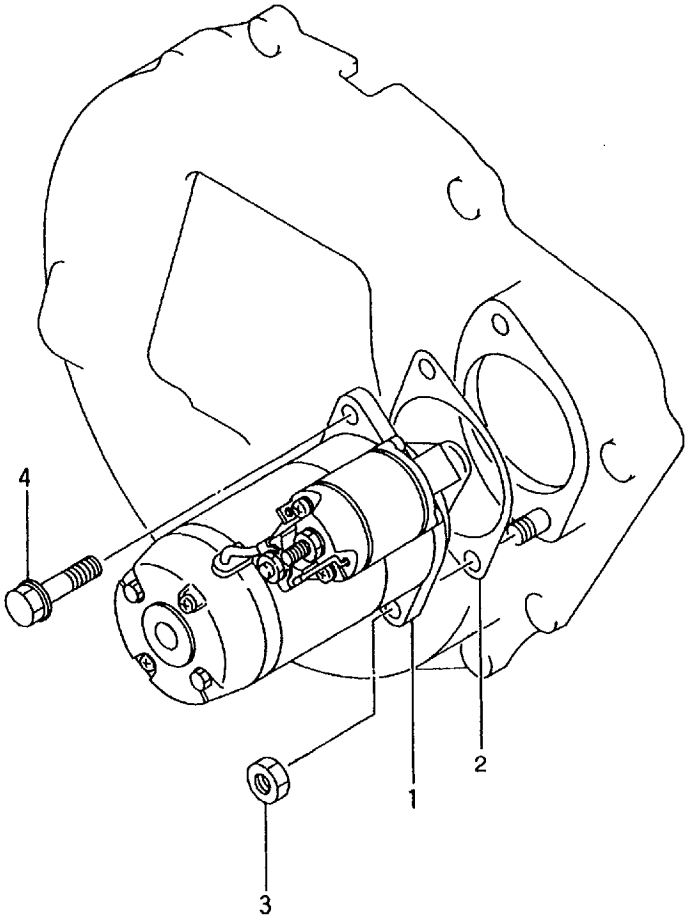

A :H15KA4GR00 D :H20KA4GR01 G :H20KA4GR04 K :H25KA4GR00 N :H25KA4GR03
B :H15KA4GR03 E :H20KA4GR02 H :H20KA4GR05 L :H25KA4GR01 P :H25KA4GR60
C :H20KA4GR00 F :H20KA4GR03 J :H20KA4GR06 M :H25KA4GR02 Q :H25KA4GR61

No.	Part No.	Description	Req'd	Remarks • Serial No.
1	N-23300-00H10	STARTER	1	A,B,C,E,F,G,H,J
				SEE LOC.I-12
-	N-23300-L1123	STARTER	1	D
				STARTER
				SEE LOC.I-13
2	N-23399-L1123	GASKET	1	D
3	N-08911-1401G	NUT	1	A,B,C,D,E,F,G,H,J
4	N-08121-0351F	BOLT,HEXAGON	1	A,B,C,D,E,F,G,H,J

I-11 STARTER(FITTING PARTS)

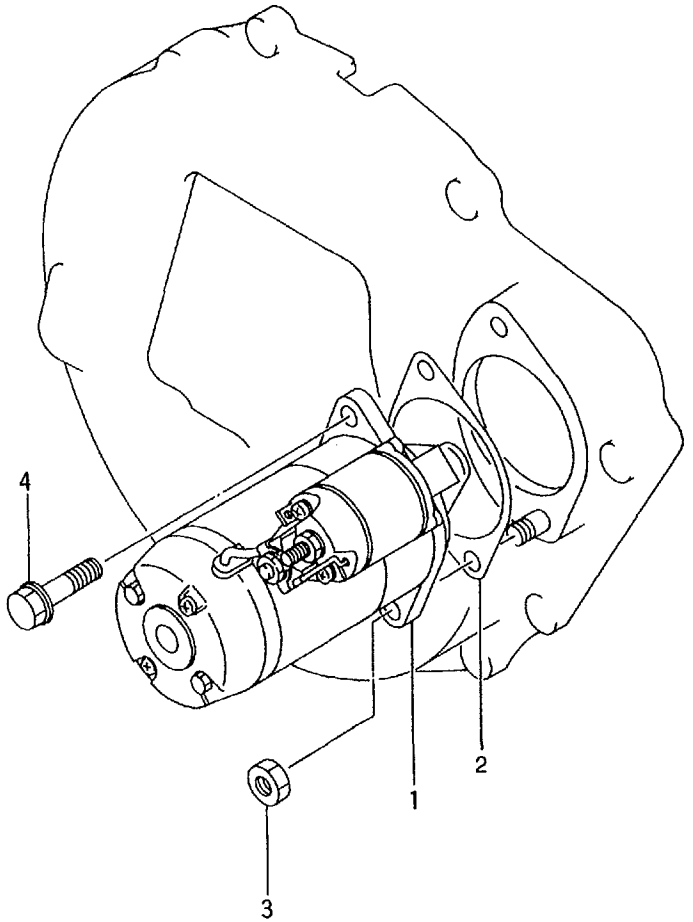

A :H15KA4GR00 D :H20KA4GR01 G :H20KA4GR04 K :H25KA4GR00 N :H25KA4GR03
B :H15KA4GR03 E :H20KA4GR02 H :H20KA4GR05 L :H25KA4GR01 P :H25KA4GR60
C :H20KA4GR00 F :H20KA4GR03 J :H20KA4GR06 M :H25KA4GR02 Q :H25KA4GR61

No.	Part No.	Description	Req'd	Remarks · Serial No.
1	N-23300-K9160	STARTER	1	K,M,N,P,Q SEE LOC.I-14
-	N-23300-L1123	STARTER	1	L STARTER SEE LOC.I-13
2	N-23399-L1123	GASKET	1	L
3	N-08911-1401G	NUT	1	K,L,M,N,P,Q
4	N-08121-0351F	BOLT,HEXAGON	1	K,L,M,N,P,Q

I-12 STARTER (INNER PARTS)

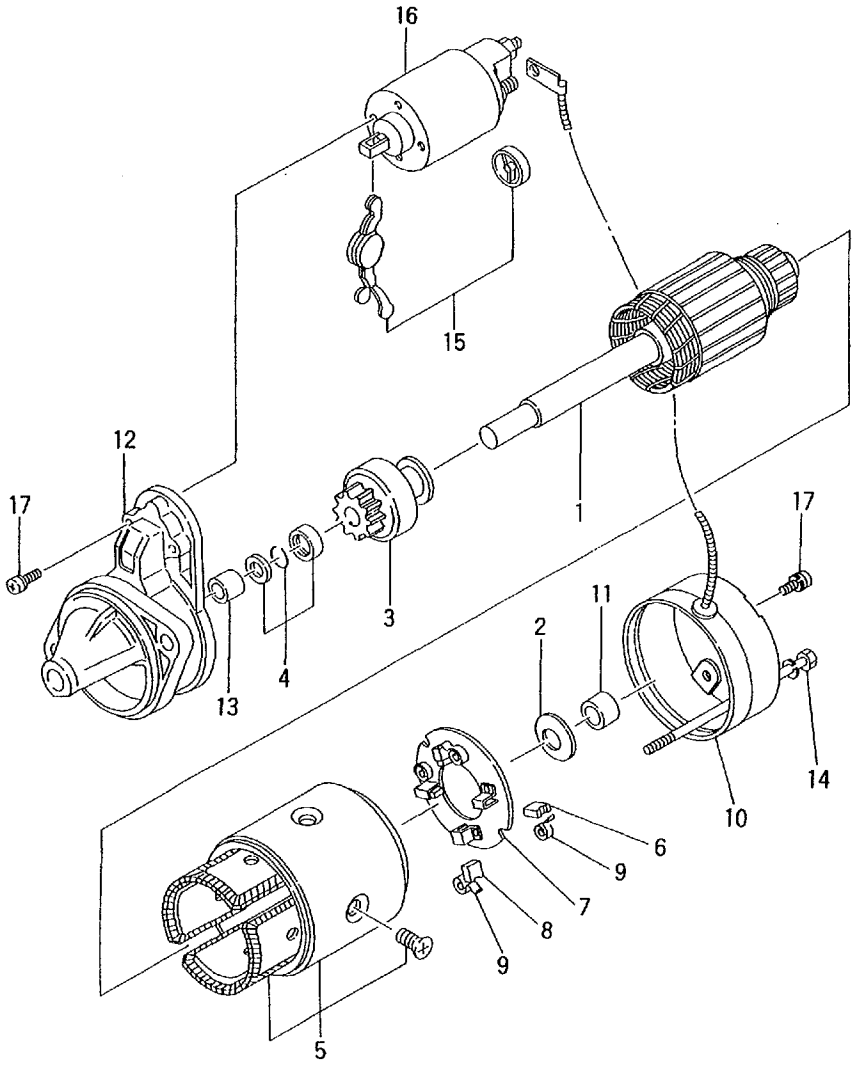

A :H15KA4GR00 D :H20KA4GR01 G :H20KA4GR04 K :H25KA4GR00 N :H25KA4GR03
B :H15KA4GR03 E :H20KA4GR02 H :H20KA4GR05 L :H25KA4GR01 P :H25KA4GR60
C :H20KA4GR00 F :H20KA4GR03 J :H20KA4GR06 M :H25KA4GR02 Q :H25KA4GR61

No.	Part No.	Description	Req'd	Remarks • Serial No.
A	N-23300-00H10	STARTER-ASSY	1	A,B,C,E,F,G,H,J
				INC.1-17
1	N-23310-42L10	ARMATURE	1	A,B,C,E,F,G,H,J
2	N-23460-M8011	SET,WASHER	1	A,B,C,E,F,G,H,J
3	N-23354-42L10	PINION,CLUTCH	1	A,B,C,E,F,G,H,J
4	N-23465-42L10	KIT,STOPPER	1	A,B,C,E,F,G,H,J
5	N-23302-T5000	YOKE	1	A,B,C,E,F,G,H,J
				INC.6
6	N-23380-M8310	BRUSH(+)	2	A,B,C,E,F,G,H,J
7	N-23378-M8011	HOLDER	1	A,B,C,E,F,G,H,J
				INC.8,9
8	N-23380-M8311	BRUSH(-)	1	A,B,C,E,F,G,H,J
9	N-23333-M1510	SPRING,BRUSH	3	A,B,C,E,F,G,H,J
10	N-23337-42L10	COVER	1	A,B,C,E,F,G,H,J
				INC.11
11	N-23338-M8011	BUSHING	1	A,B,C,E,F,G,H,J
12	N-23318-00H10	CASE	1	A,B,C,E,F,G,H,J
				INC.13
13	N-23319-M8011	BUSHING	1	A,B,C,E,F,G,H,J
14	N-23340-M8010	BOLT	2	A,B,C,E,F,G,H,J
15	N-23322-42L10	SET,LEVER	1	A,B,C,E,F,G,H,J
16	N-23343-00H10	SWITCH,MAGNET	1	A,B,C,E,F,G,H,J
17	N-23480-M0110	SET,SCREW	1	A,B,C,E,F,G,H,J

I-13 STARTER(INNER PARTS)

A :H15KA4GR00 D :H20KA4GR01 G :H20KA4GR04 K :H25KA4GR00 N :H25KA4GR03
B :H15KA4GR03 E :H20KA4GR02 H :H20KA4GR05 L :H25KA4GR01 P :H25KA4GR60
C :H20KA4GR00 F :H20KA4GR03 J :H20KA4GR06 M :H25KA4GR02 Q :H25KA4GR61

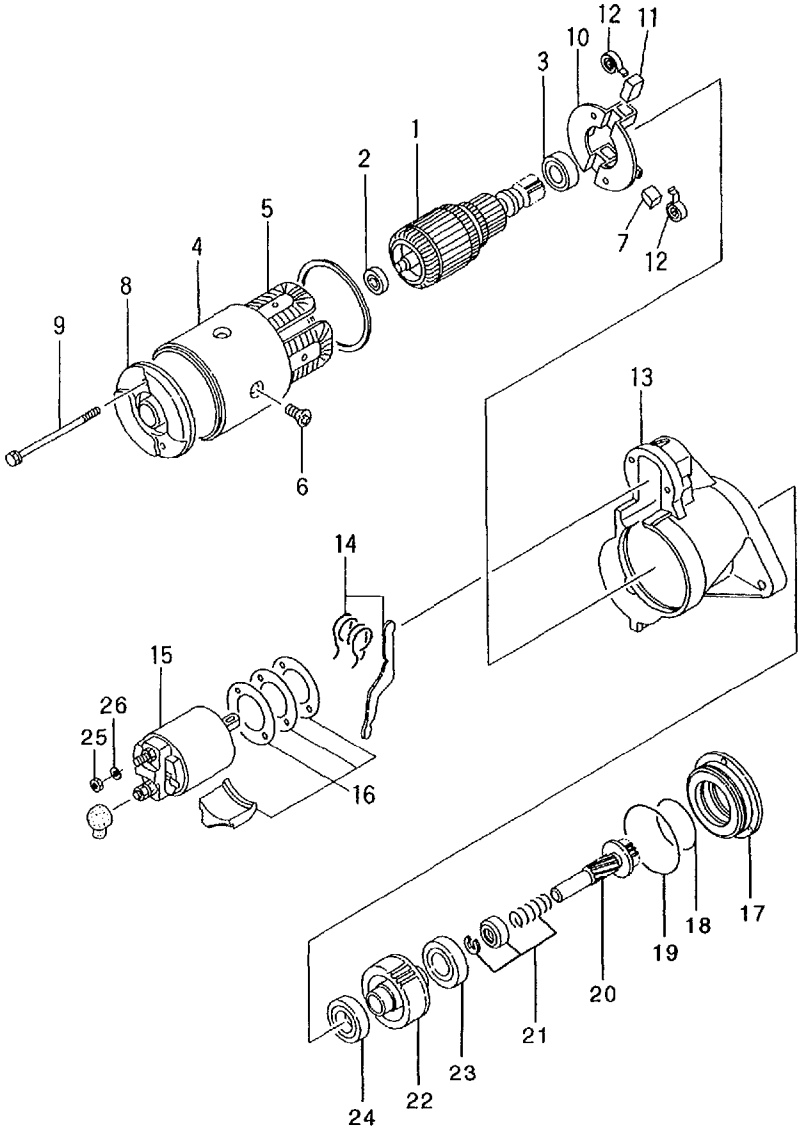

No.	Part No.	Description	Req'd	Remarks • Serial No.
A1	N-23300-L1123	STARTER-ASSY	1	D,L
				INC.1-26
1	N-23310-V5300	ARMATURE	1	D,L
				INC.2,3
2	N-23319-M4900	BRG,BALL	1	D,L
3	N-23338-M4900	BRG,BALL	1	D,L
4	N-23302-L1122	YOKE	1	D,L
				INC.5-7
5	N-23306-W1700	COIL,FIELD	1	D,L
6	N-23305-09500	SCREW	4	D,L
7	N-23380-M4900	BRUSH(+)	2	D,L
8	N-23337-M4901	COVER	1	D,L
9	N-23340-N5900	BOLT	2	D,L
10	N-23378-05E00	HOLDER	1	D,L
				INC.11,12
11	N-23379-M4900	BRUSH(-)	2	D,L
12	N-23333-M4901	SPRING	4	D,L
13	N-23312-L1123	CASE,GEAR	1	D,L
14	N-23322-H9100	SET,LEVER	1	D,L
15	N-23343-L1122	SWITCH,MAGNET	1	D,L
16	N-23470-D0300	KIT,COVER	1	D,L
17	N-23359-L1122	RETAINER,BEARING	1	D,L
18	N-23397-L1122	O-RING	1	D,L
19	N-23398-L1122	O-RING	1	D,L
A2	N-23312-L1122	PINION-ASSY	1	D,L
				INC.20-24
20	N-23357-L1122	SHAFT	1	D,L
21	N-23465-M4900	KIT,STOPPER	1	D,L
22	N-23354-L1122	CLUTCH	1	D,L
				INC.23,24
23	N-23363-L1122	BRG	1	D,L
24	N-23358-M4900	BRG,BALL	1	D,L
25	N-08911-3081A	NUT	2	D,L
26	N-08915-13810	WASHER	2	D,L

I-14 STARTER(INNER PARTS)

A :H15KA4GR00 D :H20KA4GR01 G :H20KA4GR04 K :H25KA4GR00 N :H25KA4GR03
B :H15KA4GR03 E :H20KA4GR02 H :H20KA4GR05 L :H25KA4GR01 P :H25KA4GR60
C :H20KA4GR00 F :H20KA4GR03 J :H20KA4GR06 M :H25KA4GR02 Q :H25KA4GR61

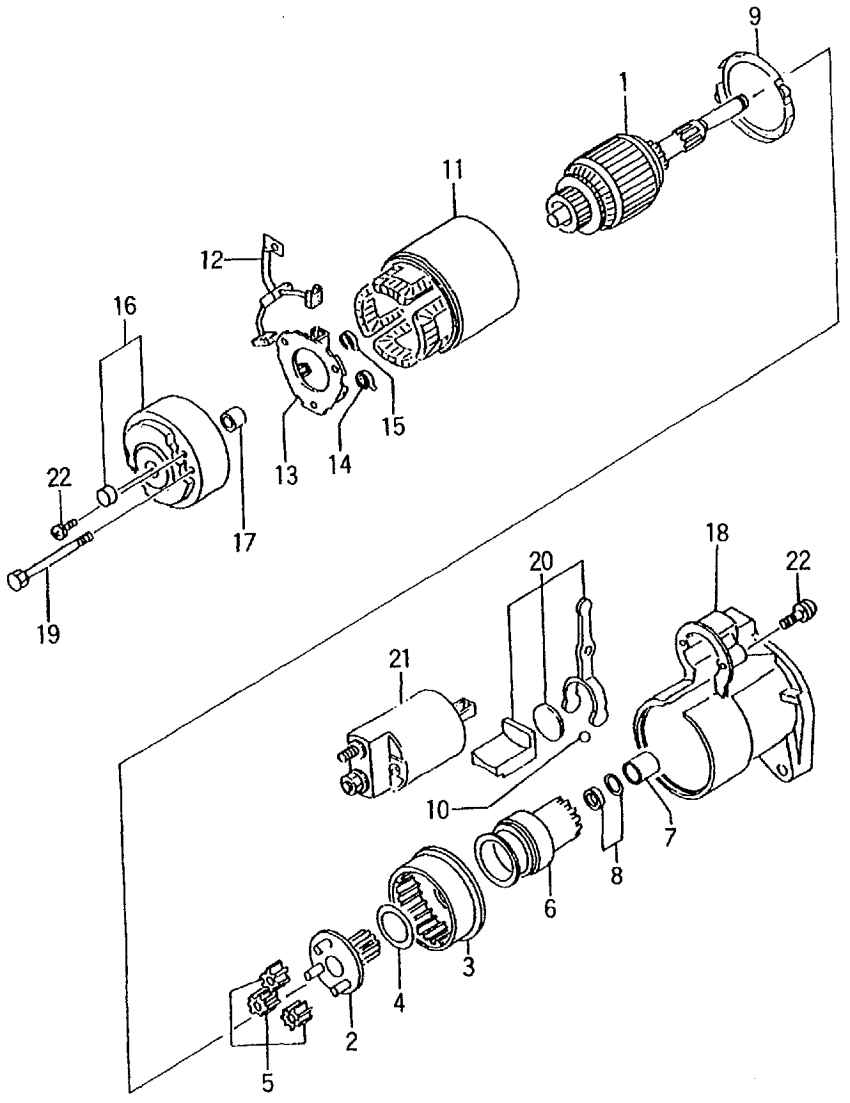

No.	Part No.	Description	Req'd	Remarks • Serial No.
A1	N-23300-K9160	STARTER-ASSY	1	K,M,N,P,Q
				INC.1-22
1	N-23310-01N11	ARMATURE	1	K,M,N,P,Q
A2	N-23312-K9160	PINION-ASSY	1	K,M,N,P,Q
				INC.2-8
2	N-23312-W9811	PINION	1	K,M,N,P,Q
3	N-23360-30R12	GEAR	1	K,M,N,P,Q
4	NO PART NO.	WASHER,THRUST	1	K,M,N,P,Q
5	N-23361-42L70	GEAR	3	K,M,N,P,Q
6	N-23354-K9160	CLUTCH	1	K,M,N,P,Q
7	N-23316-86G10	CAP	1	K,M,N,P,Q
8	N-23465-W9810	KIT,STOPPER	1	K,M,N,P,Q
9	N-23385-42L70	PACKING	1	K,M,N,P,Q
10	N-23325-42L70	BALL	1	K,M,N,P,Q
11	N-23302-77A10	YOKE	1	K,M,N,P,Q
12	N-23380-K9160	BRUSH(+)	1	K,M,N,P,Q
13	N-23378-42L70	HOLDER	1	K,M,N,P,Q
				INC.14,15
14	NO PART NO.	SPRING,BRUSH	2	K,M,N,P,Q
15	NO PART NO.	SPRING,BRUSH	2	K,M,N,P,Q
16	N-23337-01N10	COVER	1	K,M,N,P,Q
				INC.17
17	NO PART NO.	COVER	1	K,M,N,P,Q
18	N-23318-K9160	CASE-ASSY,GEAR	1	K,M,N,P,Q
19	N-23340-20P10	BOLT	2	K,M,N,P,Q
20	N-23322-42L70	SET,LEVER,SHIFT	1	K,M,N,P,Q
21	N-23343-00H11	SWITCH	1	K,M,N,P,Q
22	N-23480-M0110	SET,SCREW	1	K,M,N,P,Q

M-2 PARTS NUMBER INDEX

PART No.	LOCATION	PART No.	LOCATION	PART No.	LOCATION	PART No.	LOCATION	PART No.	LOCATION	PART No.	LOCATION
N-KP510-00150	C-6	N-08120-64028	G-2	N-08223-83010	E-3	N-08915-3381A	H-3	N-11024-85G01	C-2	N-11063-Y4400	D-3
N-KP510-00150	C-7	N-08120-64028	G-4	N-08223-83210	D-2	N-08915-4401A	D-4	N-11024-85G01	C-4	N-11065-30000	D-2
N-KP710-00150	C-2	N-08120-8161F	H-8	N-08223-83210	D-3	N-08915-4401A	D-5	N-11026-61000	C-2	N-11065-30000	D-3
N-KP710-00150	C-3	N-08120-8161F	H-9	N-08223-83210	E-2	N-08916-13500	F-2	N-11026-61000	C-4	N-11072-50K01	G-2
N-KP710-00150	C-4	N-08120-8201E	C-2	N-08223-83210	E-3	N-08916-13500	F-3	N-11040-50K02	D-2	N-11072-50K01	G-4
N-KP710-00150	C-4	N-08120-8201E	C-4	N-08340-60810	H-2	N-08931-3021A	C-2	N-11040-55K02	D-2	N-11099-50K02	D-2
N-KP710-00150	C-6	N-08120-8201E	F-2	N-08340-60810	H-3	N-08931-3021A	C-4	N-11040-60K02	D-3	N-11099-50K02	D-3
N-KP710-00150	C-7	N-08120-8201E	F-3	N-08360-8251D	I-4	N-10005-1E400	D-2	N-11042-50K25	C-2	N-11110-50K00	C-2
N-00921-22500	D-4	N-08120-8201E	G-2	N-08360-8251D	I-5	N-10005-1E400	D-3	N-11042-50K25	C-4	N-11110-50K00	C-4
N-00921-22500	D-5	N-08120-8201E	G-4	N-08911-10637	C-12	N-10005-50K01	D-2	N-11042-50K25	D-2	N-11110-50K01	C-2
N-00926-41610	D-4	N-08120-8201F	I-6	N-08911-10637	C-13	N-10005-50K01	D-3	N-11042-50K25	D-3	N-11110-50K01	C-4
N-00926-41610	D-5	N-08120-8201F	I-7	N-08911-1401G	I-10	N-10101-50K25	C-2	N-11042-50K25	E-2	N-11119-61000	C-2
N-00926-51600	C-8	N-08120-8251E	C-6	N-08911-1401G	I-11	N-10101-50K25	C-4	N-11042-50K25	E-3	N-11119-61000	C-4
N-00926-51600	C-10	N-08120-8251E	C-6	N-08911-2081A	C-6	N-10101-50K25	C-6	N-11042-50K25	G-2	N-11128-69200	C-2
N-00933-1351A	C-2	N-08120-8251E	C-7	N-08911-2081A	C-7	N-10101-50K25	C-7	N-11042-50K25	G-4	N-11128-69200	C-4
N-00933-1351A	C-4	N-08120-8251E	C-7	N-08911-2081A	G-2	N-10101-50K25	D-2	N-11044-50K00	D-2	N-11140-50K00	C-3
N-00933-1351A	D-2	N-08120-8251F	I-6	N-08911-2081A	G-2	N-10101-50K25	D-3	N-11044-55K00	D-2	N-11140-50K00	C-4
N-00933-1351A	D-3	N-08120-8251F	I-7	N-08911-2081A	G-4	N-10101-50K25	E-2	N-11044-60K00	D-3	N-11213-K7216	C-3
N-01552-00321	I-2	N-08120-8301E	G-2	N-08911-2081A	H-2	N-10101-50K25	E-3	N-11046-73402	C-2	N-11213-K7216	C-5
N-01552-00321	I-3	N-08120-8301E	G-4	N-08911-2081A	H-3	N-10101-50K25	F-2	N-11046-73402	C-4	N-11214-K7216	C-3
N-01555-00261	G-2	N-08120-8351A	E-2	N-08911-3081A	I-13	N-10101-50K25	F-3	N-11046-73402	C-6	N-11214-K7216	C-5
N-01555-00261	G-4	N-08120-8351A	E-3	N-08912-7081A	E-2	N-10101-50K25	G-2	N-11046-73402	C-7	N-11392-50K00	C-2
N-02117-00511	G-2	N-08120-8351E	H-8	N-08912-7081A	E-3	N-10101-50K25	G-4	N-11046-73402	G-2	N-11392-50K00	C-4
N-02117-00511	G-4	N-08120-8351E	H-9	N-08915-13600	F-2	N-10101-50K25	H-2	N-11046-73402	G-4	N-11715-50K00	I-6
N-02117-03011	G-2	N-08120-8451E	C-6	N-08915-13600	F-3	N-10101-50K25	H-3	N-11053-73400	C-2	N-11715-50K00	I-7
N-02117-03011	G-5	N-08120-8451E	C-7	N-08915-1381A	F-2	N-10101-50K25	H-8	N-11053-73400	C-4	N-11720-K4080	G-5
N-02173-02720	I-2	N-08121-0201E	D-2	N-08915-1381A	F-3	N-10101-50K25	H-9	N-11057-H5000	D-2	N-11720-K9100	G-5
N-02173-02720	I-3	N-08121-0201E	D-3	N-08915-13810	I-13	N-10101-50K25	I-4	N-11057-H5000	D-3	N-11810-A3501	C-12
N-08120-61228	C-3	N-08121-0351F	I-10	N-08915-1401A	D-4	N-10101-50K25	I-5	N-11057-H5010	D-2	N-11810-A3501	C-13
N-08120-61228	C-5	N-08121-0351F	I-11	N-08915-1401A	D-5	N-11000-50K00	C-2	N-11057-H5010	D-3	N-11826-50K00	C-12
N-08120-61228	H-2	N-08171-0281A	C-3	N-08915-2081A	G-2	N-11000-55K00	C-2	N-11060-W7000	G-2	N-11826-50K00	C-13
N-08120-61228	H-3	N-08171-0281A	C-5	N-08915-2081A	G-4	N-11000-60K00	C-4	N-11060-W7000	G-4	N-11828-50K00	C-12
N-08120-61410	F-2	N-08171-0401A	D-4	N-08915-2401A	C-3	N-11019-32201	C-2	N-11060-50K00	D-2	N-11828-50K00	C-13
N-08120-61410	F-3	N-08171-0401A	D-5	N-08915-2401A	C-5	N-11019-32201	C-4	N-11060-50K00	D-3	N-11830-50K00	C-12
N-08120-61628	D-4	N-08216-64510	H-2	N-08915-3381A	C-6	N-11023-78200	C-2	N-11061-K9760	G-4	N-11830-50K00	C-13
N-08120-61628	D-5	N-08216-64510	H-3	N-08915-3381A	C-7	N-11023-78200	C-4	N-11061-50K00	G-2	N-12010-50K00	C-8
N-08120-62028	G-2	N-08223-8201A	E-2	N-08915-3381A	G-2	N-11024-K0100	C-2	N-11061-50K00	G-4	N-12010-50K70	C-8
N-08120-62028	G-4	N-08223-8201A	E-3	N-08915-3381A	G-3	N-11024-K0100	C-4	N-11062-07N00	G-2	N-12010-50K71	C-8
N-08120-63528	D-4	N-08223-82510	G-2	N-08915-3381A	G-4	N-11024-78200	C-2	N-11062-07N00	G-4	N-12010-50K72	C-8
N-08120-63528	D-5	N-08223-83010	E-2	N-08915-3381A	H-2	N-11024-78200	C-4	N-11063-Y4400	D-2	N-12010-55K00	C-8

M-3 PARTS NUMBER INDEX

PART No.	LOCATION	PART No.	LOCATION	PART No.	LOCATION	PART No.	LOCATION	PART No.	LOCATION	PART No.	LOCATION
N-12010-55K70	C-8	N-12208-50K00	C-11	N-12320-50K20	C-7	N-13201-50K00	D-5	N-13264-50K00	D-3	N-14958-H9810	I-3
N-12010-55K71	C-8	N-12209-50K00	C-9	N-12322-K7320	C-6	N-13202-50K02	D-4	N-13264-50K01	D-2	N-15010-66202	F-2
N-12010-55K72	C-8	N-12209-50K00	C-11	N-12322-K7320	C-7	N-13202-50K02	D-5	N-13264-50K01	D-3	N-15010-66202	F-3
N-12010-60K00	C-10	N-12210-50K00	C-9	N-12325-L1122	C-6	N-13203-50K00	D-4	N-13270-E3400	D-2	N-15066-78200	F-2
N-12010-60K70	C-10	N-12210-50K00	C-11	N-12325-L1122	C-7	N-13203-50K00	D-5	N-13270-E3400	D-3	N-15066-78200	F-3
N-12010-60K71	C-10	N-12211-50K00	C-9	N-12351-50K00	C-8	N-13207-53F00	D-4	N-13274-B1101	D-2	N-15075-50K01	C-2
N-12010-60K72	C-10	N-12211-50K00	C-11	N-12351-50K00	C-10	N-13207-53F00	D-5	N-13274-B1101	D-3	N-15075-50K01	C-4
N-12033-50K00	C-8	N-12212-50K00	C-9	N-12351-50K10	C-9	N-13209-01B00	D-4	N-13275-E0720	D-2	N-15208-01B01	F-2
N-12033-55K00	C-8	N-12212-50K00	C-11	N-12351-50K10	C-10	N-13209-01B00	D-5	N-13275-E0720	D-3	N-15208-01B01	F-3
N-12033-60K00	C-10	N-12279-50K00	C-2	N-12352-00H00	C-9	N-13210-01M00	D-4	N-13289-58000	D-4	N-15213-21002	C-2
N-12035-50K00	C-8	N-12279-50K00	C-4	N-12352-00H00	C-11	N-13210-01M00	D-5	N-13289-58000	D-5	N-15213-21002	C-4
N-12035-55K00	C-8	N-12293-P0500	C-2	N-12353-50K00	C-9	N-13222-78200	D-4	N-13501-50K00	C-6	N-15241-16A01	C-2
N-12035-60K00	C-10	N-12293-P0500	C-4	N-12353-50K00	C-11	N-13222-78200	D-5	N-13501-50K00	C-7	N-15241-16A01	C-4
N-12036-50K00	C-8	N-12297-50K00	C-2	N-12353-50K10	C-9	N-13223-78200	D-4	N-14003-50K76	E-2	N-15255-85550	D-2
N-12036-55K00	C-8	N-12297-50K00	C-4	N-12353-50K10	C-11	N-13223-78200	D-5	N-14003-50K76	E-3	N-15255-85550	D-3
N-12036-60K00	C-10	N-12303-50K00	C-8	N-12354-50K00	C-9	N-13224-78200	D-4	N-14004-L1101	E-2	N-15270-B3400	D-2
N-12037-50K00	C-8	N-12303-50K00	C-10	N-12354-50K00	C-11	N-13224-78200	D-5	N-14004-L1101	E-3	N-15270-B3400	D-3
N-12037-55K00	C-8	N-12307-50K00	C-8	N-13001-50K00	D-4	N-13226-78200	D-4	N-14035-50K00	E-2	N-16010-50K01	H-2
N-12037-60K00	C-10	N-12307-50K00	C-10	N-13001-50K00	D-5	N-13226-78200	D-5	N-14035-50K00	E-3	N-16010-50K01	H-4
N-12100-50K00	C-8	N-12308-W3400	C-9	N-13002-71200	C-2	N-13231-H1001	D-4	N-14037-E3000	E-2	N-16010-55K01	H-2
N-12100-60K00	C-10	N-12308-W3400	C-10	N-13002-71200	C-4	N-13231-H1001	D-5	N-14037-E3000	E-3	N-16010-55K01	H-4
N-12109-D0210	C-8	N-12309-29S00	C-9	N-13010-78201	D-4	N-13234-78200	D-4	N-14037-32200	E-2	N-16010-60K01	H-3
N-12109-40F00	C-10	N-12309-29S00	C-10	N-13010-78201	D-5	N-13234-78200	D-5	N-14037-32200	E-3	N-16010-60K01	H-6
N-12111-D2800	C-8	N-12310-K8760	C-9	N-13012-78200	D-4	N-13235-78200	D-4	N-14049-76001	D-2	N-16013-55K00	H-5
N-12111-85G00	C-10	N-12310-K8760	C-11	N-13012-78200	D-5	N-13235-78200	D-5	N-14049-76001	D-3	N-16013-55K00	H-7
N-12112-D2800	C-8	N-12310-K8770	C-9	N-13013-78200	D-4	N-13238-12200	D-4	N-14049-76001	G-2	N-16033-A4500	H-5
N-12112-H1000	C-8	N-12310-K8770	C-11	N-13013-78200	D-5	N-13238-12200	D-5	N-14049-76001	G-4	N-16033-T8000	H-5
N-12112-40F00	C-10	N-12310-K9600	C-9	N-13021-03G00	C-8	N-13252-32200	D-4	N-14053-E0600	E-2	N-16033-20J00	H-7
N-12113-D2800	C-8	N-12310-K9600	C-11	N-13021-03G00	C-10	N-13252-32200	D-5	N-14053-E0600	E-3	N-16036-50K00	H-5
N-12114-D2800	C-8	N-12310-K9601	C-9	N-13024-50K00	D-4	N-13254-58000	D-4	N-14055-50K01	G-2	N-16036-50K00	H-7
N-12117-85G00	C-10	N-12310-K9601	C-11	N-13024-50K00	D-5	N-13254-58000	D-5	N-14055-50K01	G-4	N-16036-55K00	H-5
N-12121-85G00	C-10	N-12312-50K00	C-9	N-13028-50K00	D-4	N-13255-58000	D-4	N-14075-40F04	G-2	N-16054-20J00	H-5
N-12122-85G00	C-10	N-12312-50K00	C-11	N-13028-50K00	D-5	N-13255-58000	D-5	N-14075-40F04	G-4	N-16054-26T00	H-5
N-12200-50K00	C-8	N-12313-L1122	C-6	N-13034-50K00	C-6	N-13256-W0400	D-4	N-14080-50K00	G-2	N-16054-60K00	H-7
N-12200-60K00	C-10	N-12313-L1122	C-7	N-13034-50K00	C-7	N-13256-W0400	D-5	N-14080-50K00	G-4	N-16059-D0100	H-5
N-12201-50K00	C-8	N-12313-10600	C-9	N-13042-A3510	C-6	N-13258-78201	D-4	N-14330-50K65	H-2	N-16059-D1402	H-5
N-12201-60K00	C-10	N-12313-10600	C-11	N-13042-A3510	C-7	N-13258-78201	D-5	N-14330-50K65	H-3	N-16059-60K00	H-7
N-12207-50K00	C-9	N-12315-58S00	C-9	N-13070-50K00	D-4	N-13259-78201	D-4	N-14875-A2600	I-2	N-16061-55K00	H-4
N-12207-50K00	C-11	N-12315-58S00	C-11	N-13070-50K00	D-5	N-13259-78201	D-5	N-14875-A2600	I-3	N-16061-55K00	H-6
N-12208-50K00	C-9	N-12320-50K20	C-6	N-13201-50K00	D-4	N-13264-50K00	D-2	N-14958-H9810	I-2	N-16069-B8500	H-4

M-4 PARTS NUMBER INDEX

PART No.	LOCATION	PART No.	LOCATION	PART No.	LOCATION	PART No.	LOCATION	PART No.	LOCATION	PART No.	LOCATION
N-16069-B8500	H-6	N-16187-50K00	H-7	N-16392-W7000	H-4	N-16599-N3600	I-4	N-19240-50K00	H-12	N-22100-50K15	I-2
N-16071-01M00	H-4	N-16196-55K00	H-5	N-16392-W7000	H-6	N-16599-N3600	I-5	N-19240-50K00	H-13	N-22100-50K15	I-4
N-16071-01M00	H-6	N-16196-55K00	H-6	N-16393-50Y00	H-4	N-16827-85G00	H-4	N-19244-50K00	H-12	N-22100-60K11	I-3
N-16098-D0100	H-4	N-16199-55K00	H-4	N-16393-50Y00	H-6	N-16827-85G00	H-6	N-19244-50K00	H-13	N-22100-60K11	I-5
N-16098-D0100	H-6	N-16199-55K00	H-6	N-16394-W7001	H-4	N-17010-50K00	H-8	N-19253-50K02	H-12	N-22100-60K15	I-3
N-16101-53L02	H-4	N-16217-50K00	H-4	N-16394-W7001	H-6	N-17010-50K00	H-9	N-19253-50K02	H-13	N-22100-60K15	I-5
N-16101-53L02	H-6	N-16217-50K00	H-6	N-16396-55K00	H-4	N-17010-50K00	H-10	N-20801-0C091	H-4	N-22106-50K10	I-4
N-16116-60K00	H-5	N-16217-60K00	H-5	N-16396-55K00	H-6	N-17010-50K00	H-11	N-20801-0C101	H-4	N-22106-50K15	I-4
N-16116-60K00	H-7	N-16217-60K00	H-7	N-16402-48200	H-10	N-17013-J0105	H-10	N-20801-0C111	H-6	N-22106-60K11	I-5
N-16134-60K00	H-5	N-16245-11200	H-4	N-16402-48200	H-11	N-17013-J0105	H-11	N-21010-50K01	G-4	N-22106-60K15	I-5
N-16134-60K00	H-7	N-16245-11200	H-6	N-16404-78213	H-10	N-17061-50000	H-10	N-21010-50K26	G-2	N-22125-50Y11	I-4
N-16138-55K00	H-5	N-16249-55K00	H-5	N-16404-78213	H-11	N-17061-50000	H-11	N-21010-50K26	G-4	N-22125-50Y11	I-5
N-16138-55K00	H-7	N-16249-55K00	H-7	N-16405-10400	H-10	N-17065-13210	H-10	N-21014-07N00	G-2	N-22131-55K10	I-4
N-16143-55K00	H-5	N-16266-50K01	H-4	N-16405-10400	H-11	N-17065-13210	H-11	N-21014-07N00	G-4	N-22131-55K10	I-5
N-16143-55K00	H-7	N-16266-55K01	H-4	N-16407-00H01	H-10	N-17075-M0100	H-10	N-21051-E0100	G-2	N-22157-55K10	I-4
N-16144-50K00	H-5	N-16266-60K00	H-6	N-16407-00H01	H-11	N-17075-M0100	H-11	N-21051-E0100	G-4	N-22157-55K10	I-5
N-16144-50K00	H-6	N-16267-00H01	C-12	N-16420-E0100	H-8	N-17089-M0100	H-10	N-21051-00H00	G-2	N-22157-55K15	I-4
N-16144-55K00	H-5	N-16267-50K00	C-12	N-16420-21001	H-8	N-17089-M0100	H-11	N-21051-00H00	G-4	N-22157-55K15	I-5
N-16144-55K00	H-6	N-16267-50K00	C-13	N-16420-85G00	H-8	N-17099-85G00	H-8	N-21051-20500	G-2	N-22162-55K10	I-4
N-16145-B8500	H-5	N-16267-55K00	H-4	N-16420-85G00	H-9	N-17099-85G00	H-9	N-21051-20500	G-4	N-22162-55K10	I-5
N-16145-B8500	H-6	N-16267-55K00	H-6	N-16439-10B00	C-12	N-17103-K5001	H-10	N-21060-50K00	G-2	N-22165-M5610	I-4
N-16148-50Y00	H-4	N-16286-85G00	H-5	N-16439-10B00	C-13	N-17103-K5001	H-11	N-21060-50K00	G-4	N-22165-M5610	I-5
N-16148-50Y00	H-6	N-16286-85G00	H-6	N-16439-42L00	G-2	N-17103-05H01	H-10	N-21064-19000	G-2	N-22229-50Y10	I-4
N-16151-D4000	H-5	N-16302-55K00	H-4	N-16439-42L00	G-4	N-17103-05H01	H-11	N-21079-K9760	G-4	N-22229-50Y10	I-5
N-16151-D4000	H-6	N-16302-55K00	H-6	N-16440-35210	H-10	N-17522-50K00	H-8	N-21079-50K00	G-2	N-22235-U7400	H-12
N-16156-11200	H-5	N-16313-50K00	H-6	N-16440-35210	H-11	N-17522-50K00	H-9	N-21079-50K00	G-4	N-22235-U7400	H-13
N-16156-11200	H-6	N-16313-60K00	H-4	N-16455-60K00	H-5	N-19100-K9501	H-12	N-21170-K9300	C-9	N-22301-50K10	I-4
N-16156-55K00	H-5	N-16313-60K01	H-4	N-16455-60K00	H-7	N-19100-K9702	H-13	N-21170-K9300	C-11	N-22301-50K10	I-5
N-16156-55K00	H-7	N-16318-50K67	H-2	N-16465-60K00	H-5	N-19100-K9703	H-13	N-21170-69900	C-9	N-22318-K9300	I-2
N-16160-55K00	H-5	N-16318-50K67	H-3	N-16465-60K00	H-7	N-19100-61K66	H-12	N-21170-69900	C-11	N-22318-K9300	I-3
N-16160-55K00	H-7	N-16335-34A00	I-2	N-16475-55K00	H-5	N-19110-50K00	H-12	N-21200-50K00	G-2	N-22401-W8914	I-2
N-16160-85G60	H-5	N-16335-34A00	I-3	N-16475-55K00	H-7	N-19110-50K00	H-13	N-21200-50K00	G-4	N-22401-W8914	I-3
N-16160-85G60	H-7	N-16389-55K00	H-4	N-16520-50K00	H-4	N-19110-50K10	H-12	N-21480-R0100	G-2	N-22404-55K10	I-4
N-16165-55K00	H-4	N-16389-55K00	H-6	N-16520-50K00	H-6	N-19110-60K10	H-13	N-21480-R0100	G-4	N-22404-55K10	I-5
N-16165-55K00	H-6	N-16390-01M01	H-4	N-16520-67G00	H-4	N-19206-50K01	H-12	N-21481-18000	G-2	N-22431-10560	I-2
N-16174-50K00	H-12	N-16390-01M01	H-6	N-16520-67G00	H-6	N-19206-50K01	H-13	N-21481-18000	G-4	N-22431-10560	I-3
N-16174-50K00	H-13	N-16390-50Y00	H-4	N-16569-50K10	C-12	N-19217-00H00	H-12	N-22020-55K10	I-4	N-22450-50K50	I-2
N-16174-50K10	H-2	N-16390-50Y00	H-6	N-16569-50K10	C-13	N-19217-00H00	H-13	N-22020-55K10	I-5	N-22450-50K50	I-3
N-16174-50K10	H-3	N-16391-55K00	H-4	N-16578-50K00	C-12	N-19217-00H20	H-12	N-22100-50K10	I-2	N-22451-66001	I-2
N-16187-50K00	H-5	N-16391-55K00	H-6	N-16578-50K00	C-13	N-19217-00H20	H-13	N-22100-50K10	I-4	N-22451-66001	I-3

M-5 PARTS NUMBER INDEX

PART No.	LOCATION	PART No.	LOCATION	PART No.	LOCATION	PART No.	LOCATION	PART No.	LOCATION	PART No.	LOCATION
N-22452-66001	I-2	N-23131-20P10	I-8	N-23322-42L70	I-14	N-23465-42L10	I-12				
N-22452-66001	I-3	N-23131-20P10	I-9	N-23325-42L70	I-14	N-23470-D0300	I-13				
N-22453-66001	I-2	N-23142-0B000	I-8	N-23333-M1510	I-12	N-23480-M0110	I-12				
N-22453-66001	I-3	N-23142-0B000	I-9	N-23333-M4901	I-13	N-23480-M0110	I-14				
N-22454-80001	I-2	N-23150-47N10	I-8	N-23337-M4901	I-13	N-25080-89903	D-2				
N-22454-80001	I-3	N-23150-47N10	I-9	N-23337-01N10	I-14	N-25080-89903	D-3				
N-22750-M0110	I-4	N-23153-70T12	I-8	N-23337-42L10	I-12	N-25240-89911	C-3				
N-22750-M0110	I-5	N-23153-70T12	I-9	N-23338-M4900	I-13	N-25240-89911	C-5				
N-23100-50K10	I-6	N-23156-0B000	I-8	N-23338-M8011	I-12	N-30412-K7320	C-6				
N-23100-50K10	I-7	N-23156-0B000	I-9	N-23340-M8010	I-12	N-30412-K7320	C-7				
N-23100-50K10	I-8	N-23215-50K10	I-8	N-23340-N5900	I-13	N-30412-P5100	C-2				
N-23100-50K10	I-9	N-23215-50K10	I-9	N-23340-20P10	I-14	N-30412-P5100	C-4				
N-23100-50K15	I-6	N-23215-50K11	I-8	N-23343-L1122	I-13	N-30413-61700	C-6				
N-23100-50K15	I-7	N-23215-50K11	I-9	N-23343-00H10	I-12	N-30413-61700	C-7				
N-23100-50K15	I-8	N-23300-K9160	I-11	N-23343-00H11	I-14	N-30415-K4306	C-6				
N-23100-50K15	I-9	N-23300-K9160	I-14	N-23354-K9160	I-14	N-30415-K4306	C-7				
N-23102-47N10	I-8	N-23300-L1123	I-10	N-23354-L1122	I-13	N-32202-K9160	C-9				
N-23102-47N10	I-9	N-23300-L1123	I-11	N-23354-42L10	I-12	N-32202-K9160	C-11				
N-23102-50K15	I-8	N-23300-L1123	I-13	N-23357-L1122	I-13						
N-23102-50K15	I-9	N-23300-00H10	I-10	N-23358-M4900	I-13						
N-23108-47N10	I-8	N-23300-00H10	I-12	N-23359-L1122	I-13						
N-23108-47N10	I-9	N-23302-L1122	I-13	N-23360-30R12	I-14						
N-23108-50K15	I-8	N-23302-T5000	I-12	N-23361-42L70	I-14						
N-23108-50K15	I-9	N-23302-77A10	I-14	N-23363-L1122	I-13						
N-23115-47N10	I-8	N-23305-09500	I-13	N-23378-M8011	I-12						
N-23115-47N10	I-9	N-23306-W1700	I-13	N-23378-05E00	I-13						
N-23118-47N10	I-8	N-23310-V5300	I-13	N-23378-42L70	I-14						
N-23118-47N10	I-9	N-23310-01N11	I-14	N-23379-M4900	I-13						
N-23120-22J20	I-8	N-23310-42L10	I-12	N-23380-K9160	I-14						
N-23120-22J20	I-9	N-23312-K9160	I-14	N-23380-M4900	I-13						
N-23120-30R10	I-8	N-23312-L1122	I-13	N-23380-M8310	I-12						
N-23120-30R10	I-9	N-23312-L1123	I-13	N-23380-M8311	I-12						
N-23124-50K10	I-8	N-23312-W9811	I-14	N-23385-42L70	I-14						
N-23124-50K10	I-9	N-23316-86G10	I-14	N-23397-L1122	I-13						
N-23124-50K16	I-8	N-23318-K9160	I-14	N-23398-L1122	I-13						
N-23124-50K16	I-9	N-23318-00H10	I-12	N-23399-L1123	I-10						
N-23127-50K10	I-8	N-23319-M4900	I-13	N-23399-L1123	I-11						
N-23127-50K10	I-9	N-23319-M8011	I-12	N-23460-M8011	I-12						
N-23127-50K16	I-8	N-23322-H9100	I-13	N-23465-M4900	I-13						
N-23127-50K16	I-9	N-23322-42L10	I-12	N-23465-W9810	I-14						

H15KA～H25KA

Microfiche (Film type)		Parts Manual (Book type)	
Issued	Order No.	Book No.	Issued
Jun., 1994	MFE-H15KAA	PE-H15KAA	Jun., 1994
Aug., 1995	MFE-H15KAB	PE-H15KAB	Aug., 1995
		PE-H15KAC	Jun., 1999
		PE-H15KAD	Apr., 2000

TCM株式会社
本　社　　大阪市西区京町堀１－１５－１０
発　行　　ＴＣＭテクノ株式会社

TCM CORPORATION
INTERNATIONAL MARKETING DIVISION: 1-15-5, Nishi-shimbashi, Minato-ku, Tokyo
105-0003, Japan
FAX: Japan +81-3-35918152, 3-35918153

無断で転載・複製を禁ず
All rights reserved.

I-1204003(H) Printed in Japan

TCM株式会社